AHU – AIR HANDLING UNITS

Air handling units are modular built for indoor or outdoor installation. Intended to be build in general ventilation and air-conditioning systems. Universal application: office buildings, stores, hotels and restaurants, swimming pools, industrial buildings, etc. Depending of the air flow, they could be separated in nine standard sizes from 6000 m^3/h to 45000 m^3/h.

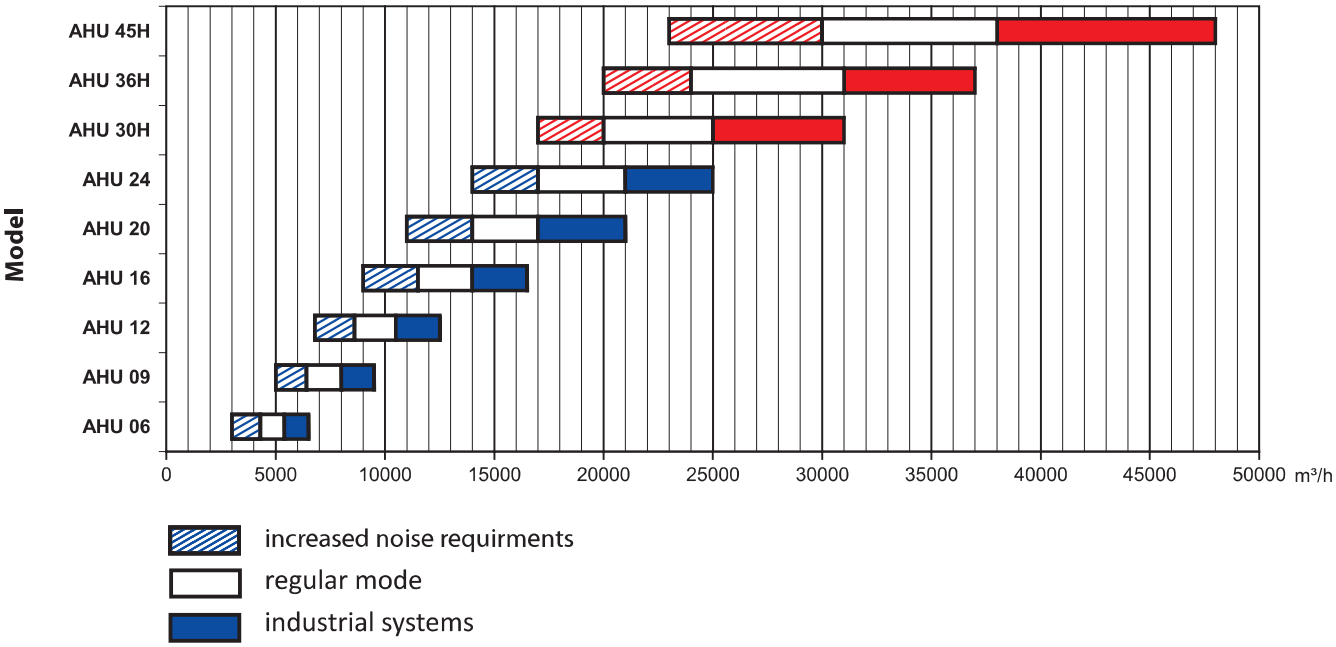

- **Modifications depending on the installations of air handling units:**
  - AHU–H - horizontal version (air handling unit with mixing and intermediate coolant) – (AHU 06 – AHU 45H)
  - AHU–DD - double deck version with heat exchanger "air-air" – (AHU 06 – AHU 24)

Description on types of sections

Construction

Supporting frame made of special aluminium profiles, connected with aluminium corners. Construction sides are closed with thermo and acoustic insulated panels. In thus structure (UU universal section) are incorporated all necessary elements for air treatment.

Side panels

Panels made of galvanized sheet steel with powder coating at their external side (RAL7035) and heat and acoustic insulated middle layer.

Two versions of side panels are possible:

- Standard thickness of 25mm for model sizes from AHU 06 to AHU 20
- Standard thickness of 50mm for model sizes from AHU 24 to AHU 45H
- On request - for outdoor installation with thickness 50mm (AHU06 – AHU20)

Insulation panels made of extruded polystyrene XPS type with density 32 kg/m^3, thermal conductivity λ=0.039 W/m K and combustibility class M1.
Upon request panels could be made of compressed mineral wool with density 60-100 kg/m^3, thermal conductivity λ=0.037 W/m K and combustibility class M0.
The panels are fixed with self-tapping screws or metric bolts. Sides which should be opened for inspection and maintenance are performed as doors, equipped with knuckles and special locks. Revision covers could be fixed to the supporting frame with reamers – upon request.
Visual inspection is made through manhole incorporated in the panel.
Sealing of the panels to the constructions is ensured by strips of self-adhesive cellular rubber.

Description on types of sections

• BU - Fan section

The section consists of centrifugal fan with forward or backward curved impeller. The type of fan is selected depending to the specific requirements, according to the air flow and resistance of the installation:

- BDB - Belt-driven double inlet centrifugal fan with backward curved impeller, standard version (section 03.07)
- CBP - Belt-driven double inlet centrifugal fan with forward curved impeller (section 03.08) only for models AHU 06, AHU 09, AHU 12
- BPF - Direct-driven single inlet centrifugal fan with backward curved impeller.

The impellers made by "Soler&Palau" are statically and dynamically balanced.
Mounted to the frame on anti-vibration mounts, equipped with flexible connection. This avoids the transmission of vibration to the casing.
Fans are driven by electrical motor, using belt drive or directly incorporated to the fan. The belts which are used are type B or SPB. Belt pulleys are with fixing bush (hub). For easier belt tension motors are installed on a slider.
All motors are three phase 400V/50Hz, protection class IP54, class F insulation and working mode S1 (continuous). Ambient temperature: - 30°C ÷ +40°C.
Maximum working temperature +60°C and maximum altitude 1000m.

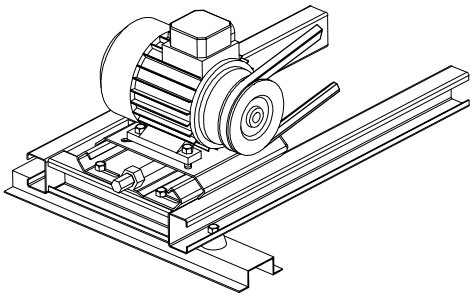

Description on types of sections

• TU - Thermal section

Include heating and/or cooling section (heat exchanger), drop separator and drain tray.
Types of sections (heat exchanger) that could be incorporated (section 02.05):

- Two-rows (2R) – basically used in heating mode.
- Four-rows (4R) – basically used in cooling mode.
- Six-rows (6R) and eight-rows (8R) could be produced upon request.

Heat exchangers "Water-air" (heating and cooling) are tubular-plate type, made of copper pipes with strung on them aluminium fins with step 2.3mm. Good contact between pipes and fins is achieved by mechanical distension. Incorporated in the section by guides (rails), ensuring the sealing by air.
Drop eliminator is a cassette of profiled blades, designed to retain the condensation after the cooling section. Made of special polymer profiles. Drain tray with ½" connection, is mounted at the bottom of the cooling section.
Siphon must be ensured. He should be placed before condensation line is connected to the building installation.

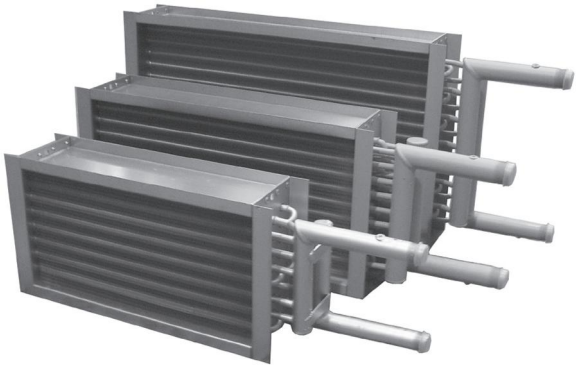

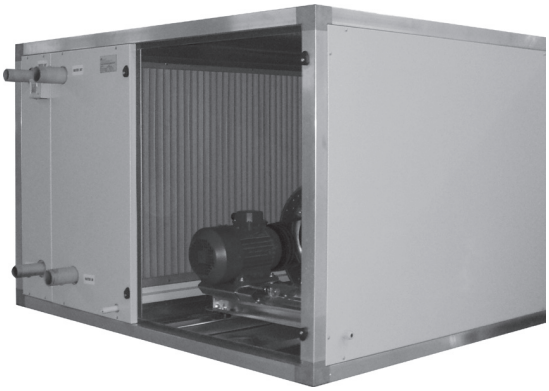

• AFU - Air filter section

Air filter section contains one or two consequently mounted air filters with different efficiency from lower to higher class from G2 to F9, according BDS EN 779 (section 02.03).
For rough dust several air filter cassettes type **AFC-V** (class G3) or **AFC-Z** (class G4) are mounted together. The cassettes slide into the section through glides (rails) and are fixed with profiles and bolt connection.
For fine purification filter wall made of several bad filters type **AFC-B** (class F6 – F8). The cassettes are fixed to the filter wall through reamers.
Air filter cassettes are disposable, they are consumables for the air handling units.
In more specific the section could be completed with other type air filters: reusable metal filters, carbon or absolute filters, class H10 – H13.

Description on types of sections

• CMU - Mixing section

Build of one or two universal sections, horizontally or vertically adjoined.
Equipped with three dampers (PRJ – multiple leaf damper, section 02.09):

- Outlet (exhaust air)
- Inlet (fresh air)
- Mixing – mounted between both streams

For smooth control is recommended damper with electric motor (actuator) and device for uniform signal control.

• RU-REC / RU-ROT Recuperative (heat recovery) section

Recuperative heat exchanger "Air-air" incorporated in double deck construction:
– **RU-REC** with plate heat exchanger type REC-AL, efficiency 50-61% (section 02.07).
– **RU-ROT** with rotary regenerative heat exchanger type RRU, efficiency 67-80%.

Heat exchanger section **RU-REC** is equipped with by-pass damper type **PRJ** (section 02.09) at the fresh air stream and drain tray at the exhaustion side. By-pass damper is used for defrosting of recuperator in winter and gave the possibility for working in "free cooling" mode during transitional seasons. The heat exchanger transfer heat only, from the warm to the cold air stream. Suitable for dehumidification of swimming pool installations.

Section **RU-ROT** is provided with rotary aluminium recuparator with motor and control panel. The recuperator transfer heat and moisture between both streams. Suitable for air-conditioning installations at premises without large separation of moisture.

Efficiency of heat exchangers depends on their type and specific parameters of the air. Calculated to each individual case.

REC-AL

ROT

Description on types of sections

• SAU - Sound attenuators section

Build in universal section baffles, placed parallel of the air stream. Baffles made of plates of fiber-glass, wrapped in glass material to prevent atomization, protected by a safety metal grid and frame of galvanized steel sheet.
Standard version:

- SA 10/10 – baffles with thickness D=100 mm and distance between baffles S=100 mm – effective from 500 to 4000 Hz (middle range frequency). Section length L=1000mm

On customers request:

- SA 10/6 – baffles with thickness D=100 mm and distance between baffles S=60 mm – effective in high range frequency.
- SA 20/12 – baffles with thickness D=200 mm and distance between baffles S=120 mm – effective in low range frequency.
- Different length of section and baffles: L=500, 1000, 1500 and 2000mm.

Sound attenuating section could be replaced by duct mounted sound attenuator type **DSA** (section 02.01).

• InU / ExhU - Inlet / outlet sections

Sections similar to those described above, equipped with one or more control valves (PJR) with build-in single-stage filter for inlet section or EK-N duct type electric heater.

• Supporting frame

Made of aluminium corners and profiles of galvanized sheet steel with high 100mm. Mounted under each section of one-storeyed units. In double deck version for top row section supporting frame is not provided. To ease the transportation and installation in the supporting frame are provided openings for lift up with mechanization.

Options and additional features

In air handling units could be incorporated also:

- Fans with 2-speed motors
- Fans with direct-drive motors and inverter
- Heating section with working fluid – steam
- Steam humidifier

For outdoor installation:

- Sections with increased insulation thickness (50mm) for outdoor installation (AHU 06- AHU20)
- Additional roof covers to lead the rain water
- Protection guard for direct discharge with net or NJR
- Precast unit made of hot galvanized profile tube and adjustable in height
- Steps (feet) for installation on surface with inclination up to 5%.

Management, control and automation:

- Anti-frost protection of water sections
- Torn belt signalization
- Dirty filter signalization
- Electric motor (actuator) for control valves (PJR, PJR-BP)
- 3-way valves with actuator for heating and cooling sections
- Automatic defrost of recuperative heat exchanger (REC) and possibility of working in “free cooling” mode”
- Speed control of the rotary regenerative heat exchanger
- Air temperature and/or humidity remote tracking
- Electric board for control and automation

Horizontal version AHU-H

Principle scheme

1. BU - Fan section
2. TU - Thermal section
3. AFU - Air filter section with two-stage cleaning
4. CMU - Mixing section

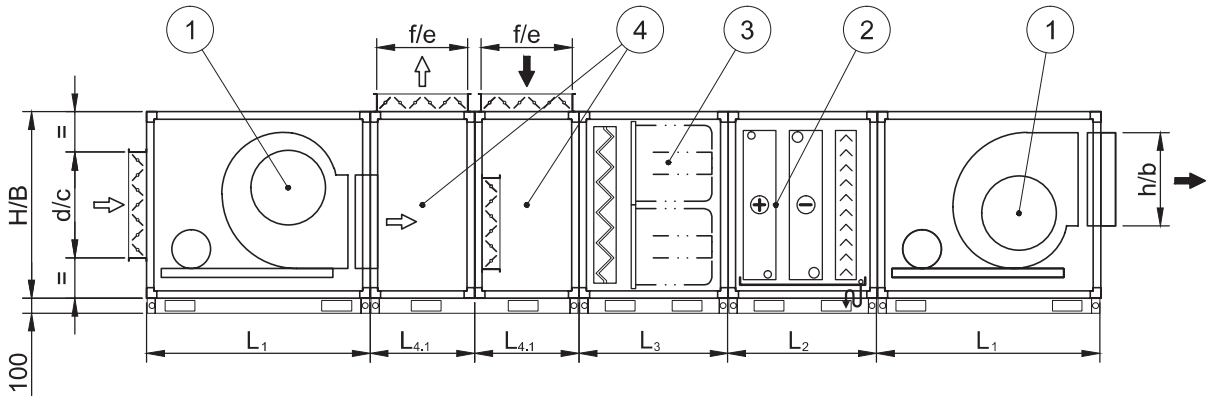

Overall and joined dimentions

Model	Air flow V [m³/h]	B [mm]	H [mm]	L_1 [mm]	L_2 [mm]	L_3 [mm]	$L_{4.1}$ [mm]	b=h [mm]	c [mm]	d [mm]	e [mm]	f [mm]
AHU 06	3000÷6500	1350	950	1300	800	1000	600	450	800	400	800	300
AHU 09	5000÷9500	1600	1050	1400	800	1000	600	500	1000	500	900	400
AHU 12	6800÷12500	1850	1150	1500	1000	1000	600	570	1200	500	1200	400
AHU 16	9000÷16500	2100	1250	1500	1000	1000	700	640	1200	700	1300	500
AHU 20	11000÷21000	2360	1350	1700	1000	1000	800	720	1400	800	1400	600
AHU 24	14000÷25000	2360	1500	1800	1000	1200	800	800	1600	800	1600	600
AHU 30H	17000÷31000	2360	1700	1900	1200	1200	1000	900	1600	1000	2000	600
AHU 36H	20000÷37000	2360	1900	2100	1200	1200	1000	1000	1600	1200	2000	700
AHU 45H	23000÷48000	2360	2300	2400	1200	1200	1000	1300	1800	1200	2200	800

Note:

- Special sizes and combinations – on an individual project.
- Size L_1 depends on type and position of fan.
- Size L_2 is related to thermal section, consisting of COT+COX+ drop eliminator.
- Size L_3 is related to air filter section with two stages filter G3 and F8
- For more information, please, see the corresponding sections in our catalogue.

Horizontal version AHU-H

Other possible combinations

1. BU - Fan section
2. TU - Thermal section with build in AFC air filter
3. InU - Inlet section with AFC-V air filter
4. CMU - Mixing section
5. UU - Universal section
6. SAU - Sound attenuating section
7. ExhU - Outlet unit with duct-type electric heater EK-N.
8. BU - Fan section – independent box
9. NJZ - External grille

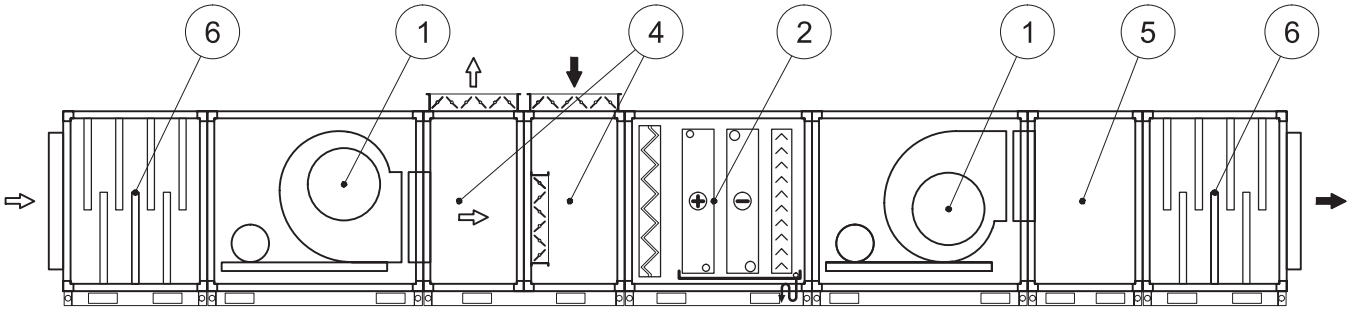

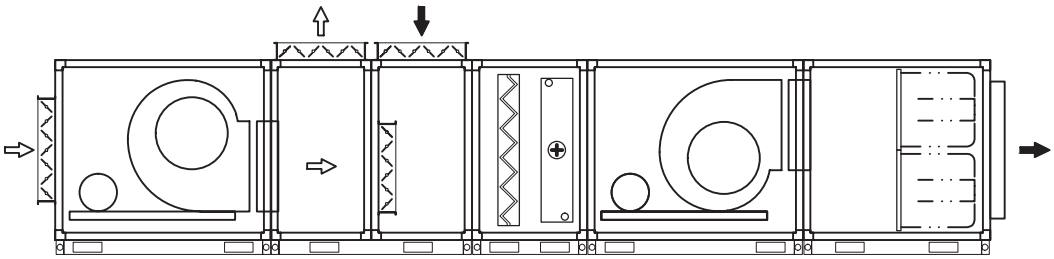

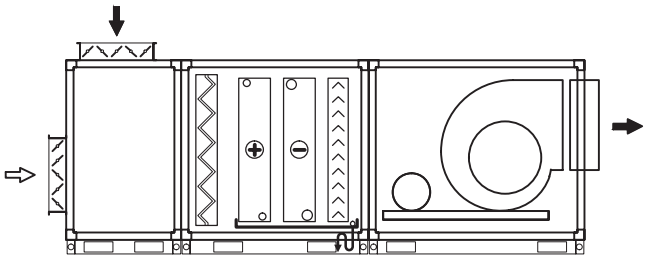

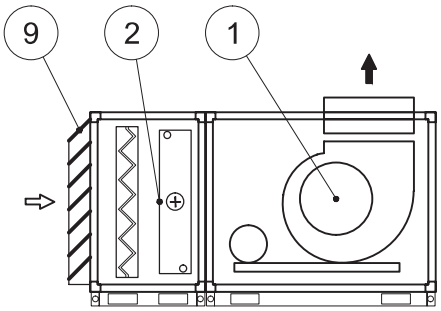

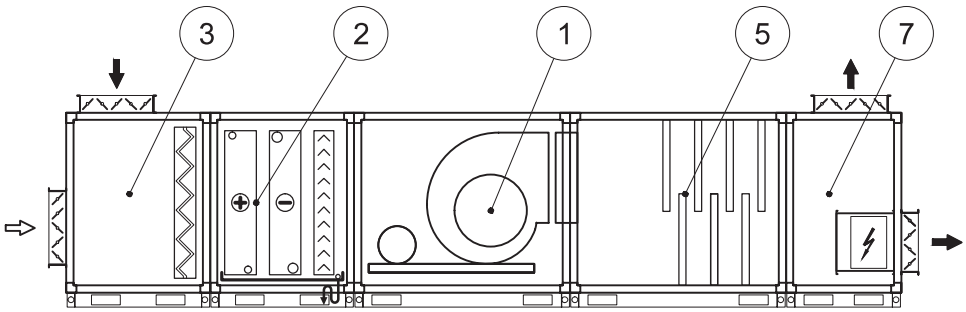

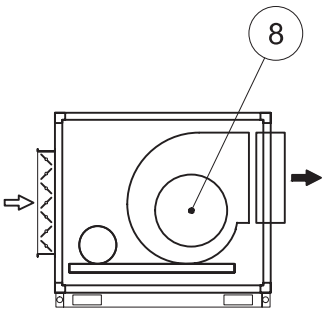

Double-deck version AHU-DD

Principles schemes

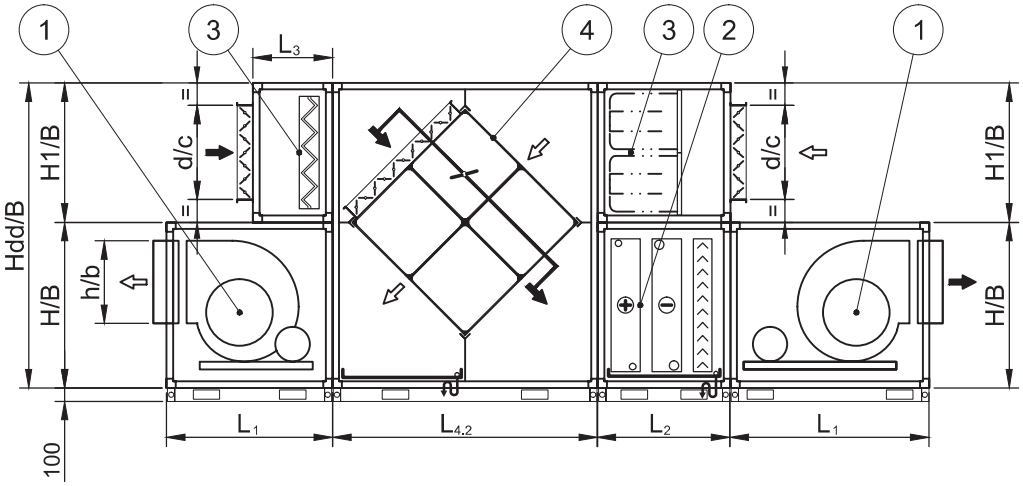

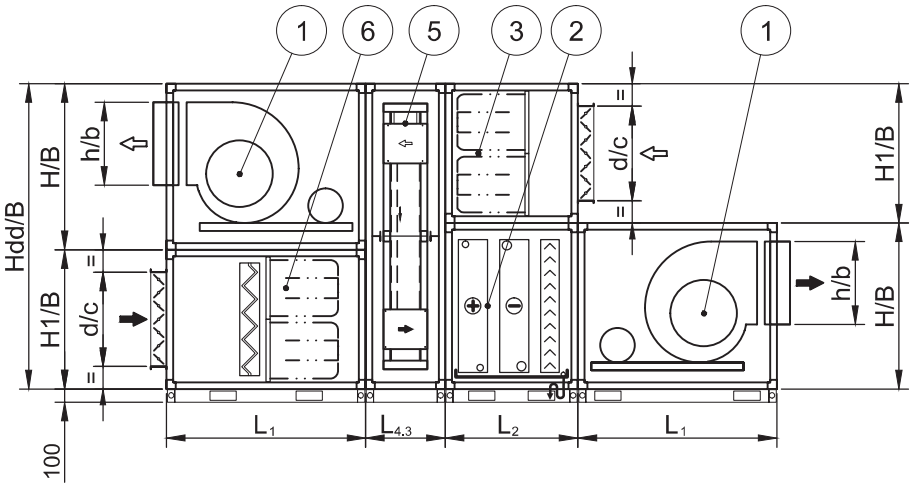

1. BU - Fan section
2. TU - Thermal section
3. InU - Inlet section with AFC-V air filter
4. RU-REC - Recuperative section with plate heat exchanger
5. RU-ROT - Recuperative section with rotary regenerative heat exchanger
6. InU - Inlet section with two stages of cleaning

Overall and joined dimentions

Model	Air flow V [m³/h]	B [mm]	Hdd [mm]	H [mm]	H_1 [mm]	L_1 [mm]	L_2 [mm]	L_3 [mm]	$L_{4.2}$ [mm]	$L_{4.3}$ [mm]	b [mm]	h [mm]	c [mm]	d [mm]
AHU 06	3000÷6500	1350	2000	950	1050	1300	800	-	2000	600	450	450	800	400
AHU 09	5000÷9500	1600	2000	1050	950	1400	800	600	2000	600	500	500	1000	500
AHU 12	6800÷12500	1850	2100	1150	950	1500	1000	600	2000	600	570	570	1200	500
AHU 16	9000÷16500	2100	2300	1250	1050	1500	1000	700	2000	600	640	640	1200	700
AHU 20	11000÷21000	2360	2500	1350	1150	1700	1000	800	2000	600	720	720	1400	800
AHU 24	14000÷25000	2360	2850	1500	1350	1800	1000	800	2850	1000	800	800	1600	800

Note:

- Special sizes and combinations – on an individual project.
- Size L_1 depends on type and position of fan.
- Size L_2 is related to thermal section, consisting of COT+COX+ drop eliminator.
- Size L_3 is related to air filter section with air filter AFC-V G3
- For more information, please, see the corresponding sections in our catalogue.

Double-deck version AHU-DD

Other possible combination

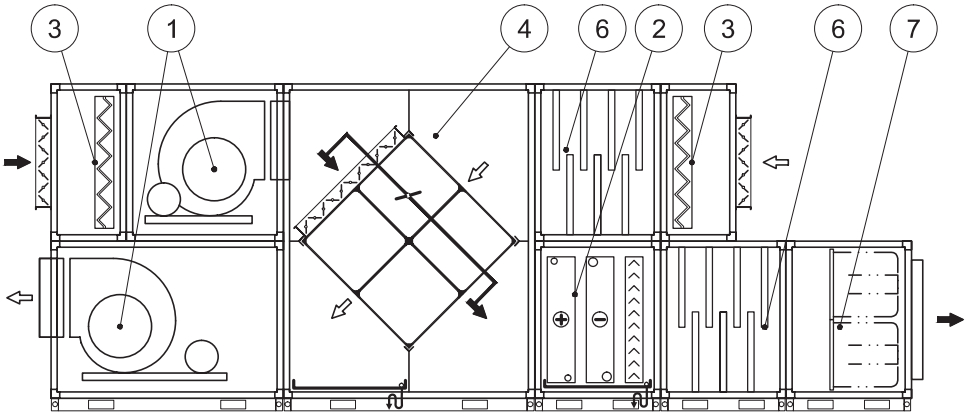

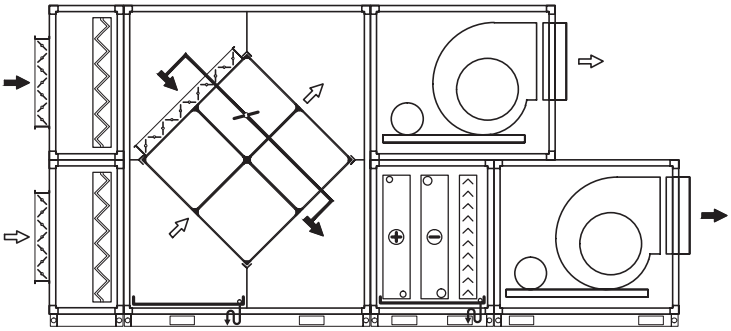

1. BU – Fan section
2. TU - Thermal section
3. InU - Inlet section with AFC-V air filter
4. RU-REC - Recuperative section with plate heat exchanger
5. RU-ROT - Recuperative section with rotary regenerative heat exchanger
6. SAU - Sound attenuating section
7. ExhU - Outlet unit with bag filter AFC-B
8. UU - Universal section
9. ExhU - Outlet unit with duct-type electric heater EK-N
10. NJZ - External grille

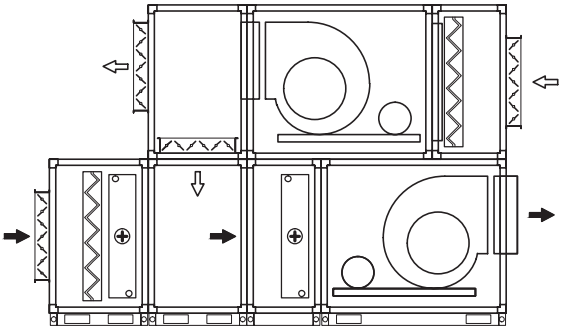

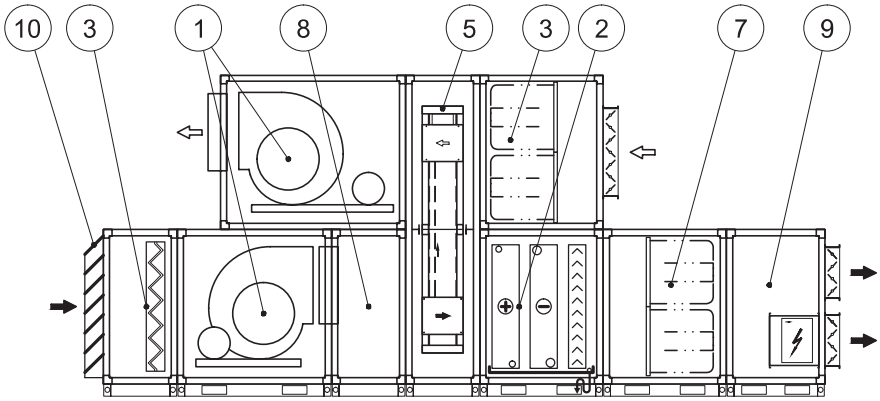

Unit sections

BU - Fan section

Possible schemes

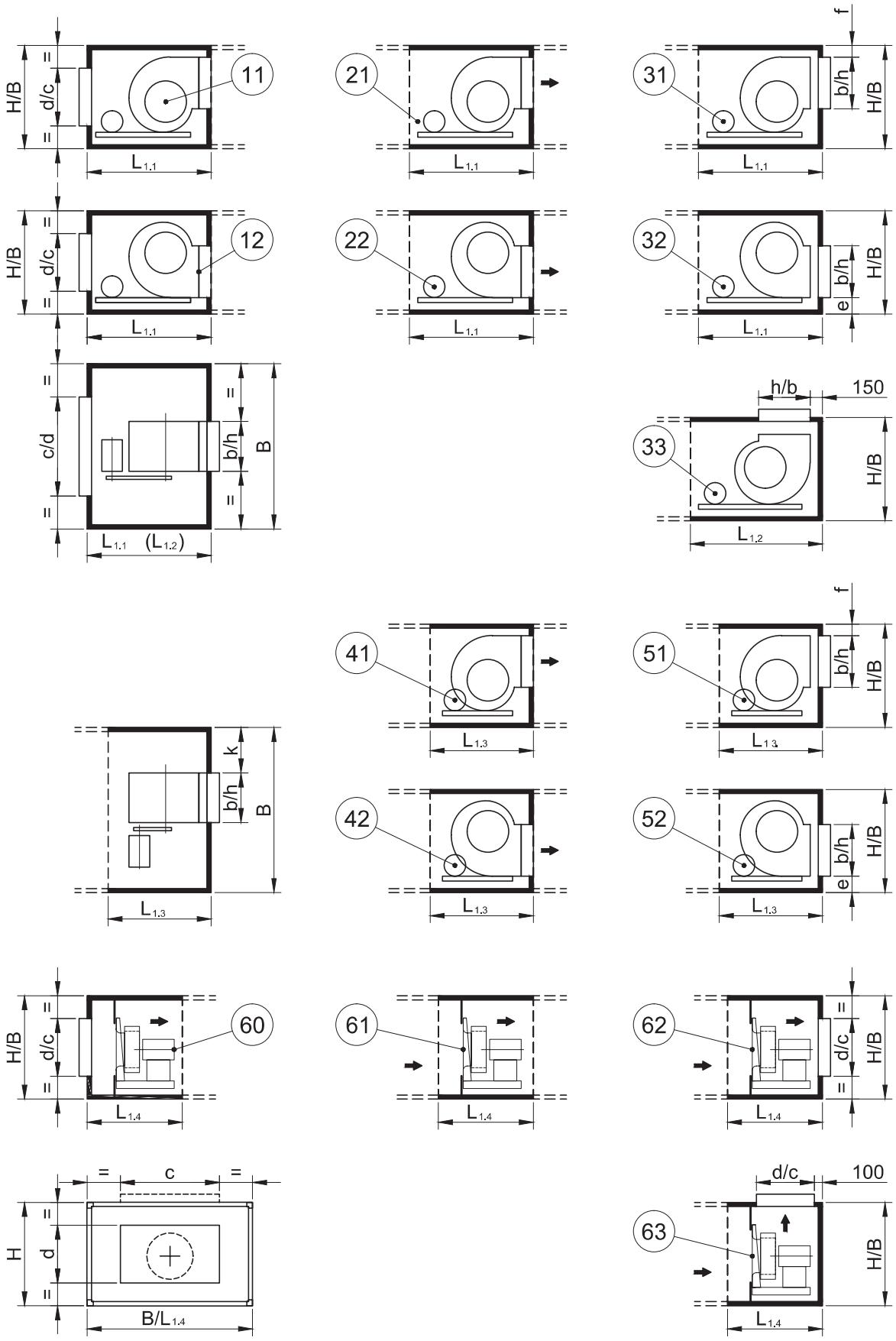

Unit sections

BU - Fan section

BU aaa / bc – d / (V / Hсв.) **example from p. 06.01-27 BU 16 / 32 – R / (15500/700)**

1. aaa – Type and size of the fan
   aaa - fan type BDB (standard version)
   aaa A – fan type CBP
   aaa B – fan type BPF
2. bc – scheme depending on the type and position of the fan (p.06.01-10):
   1c; 2c; 3c; 4c; 5c and 6c - position in section air handling unit (intermediate or ending)
   b1 – fan posotion 90°
   b2 – fan posotion 270°
   b3 – fan posotion 0°
3. d – air stream direction according to the service side:
   R – from left to right
   L – from right to left
4. V [m^3/h] – air flow of the fan
5. Hсв. [Pa] – necessary external pressure of the fan

Overall and joined dimensions, weight

Model	Fan	B [mm]	H [mm]	$L_{1.1}$ [mm]	$L_{1.2}$ [mm]	$L_{1.3}$ [mm]	b [mm]	h [mm]	e [mm]	f [mm]	k [mm]	$N_{ел.}$ [kW]	c [mm]
BU 06	BDB 355C	1350	950	1300	1300	950	450	450	175	135	300	3.0	270
BU 06A	CBP 12/9						310	340	190	290	300	4.0	245
BU 09	BDB 400C	1600	1050	1300	1400	1050	500	500	180	150	450	4.0	331
BU 09A	CBP 15/11						370	400	190	280	450	4.0	304
BU 12	BDB 450C	1850	1150	1400	1500	1150	570	570	180	155	550	5.5	416
BU 12A	CBP 18/18						560	480	180	230	550	5.5	385
BU 16	BDB 500C	2100	1250	1500	1600	1250	640	640	180	165	650	7.5	497
BU 20	BDB 560C	2360	1350	1700	1800	1350	720	720	200	135	650	11.0	636
BU 24	BDB 630C	2360	1500	1800	1950	1450	800	800	220	135	600	15.0	781
BU 30	BDB 710C	2360	1700	1900	2100	1550	900	900	220	190	550	15.0	910
BU 36	BDB 800T	2360	1900	2100	2250	-	1000	1000	265	180	-	18.5	1105
BU 45	BDB 900T	2360	2300	2250	2450	-	1130	1130	285	380	-	18.5	1335
	BDB 1000T			2400	2600		1300	1300	285	220		22.0	1489

Model	Fan	B [mm]	H [mm]	$L_{1.4}$ [mm]	$N_{el.}$ [kW]	Weight [mm]	Performance scheme	c [mm]	d [mm]
BU 06B	BPF 400	1350	950	950	3.0	187	61, 62, 63 and 64	800	400
BU 09B	BPF 450	1600	1050	950	4.0	231	61, 62, 63 and 64	1000	500
BU 12B	BPF 500	1850	1150	1050	5.5	287	61, 62, 63 and 64	1200	500
BU 16B	BPF 560	2100	1250	1150	7.5	371	61, 62, 63 and 64	1200	700
BU 20B	BPF 630	2360	1350	1350	11.0	472	61, 62, 63 and 64	1400	800
BU 24B	BPF 710	2360	1500	1500	15.0	606	61, 62, 63 and 64	1600	800
BU 30B	BPF 800	2360	1700	1700	15.0	686	61, 62, 63 and 64	1600	1000
BU 36B	BPF 900	2360	1900	1900	18.5	939	61, 62, 63 and 64	1600	1200
BU 45B	BPF 1000	2360	2300	2050	22.0	1074	61, 62, 63 and 64	1800	1200

Note:
- Dimensions c/d of the inlet / outlet flange (PJR) are valid for all fan sections
- TM – total weight of fan section BU ** / 11(12) - R(L)
- Nominal power of three phase motor Nel.
- Aerodynamic and acoustic characteristics, see sections from 06.01–18 up to 06.01-25

Unit sections

TU - Thermal section

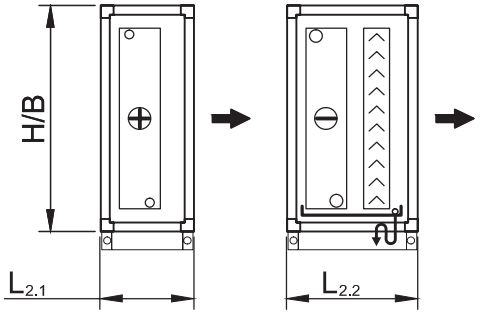

Thermal heating section
with 2 or 4 rows water coil unit
- TU COT *** / 2R - R(L) – as standard
- TU COT *** / 4R - R(L)

Thermal cooling section
with 2, 4, 6 or 8 rows water coil unit
with drop eliminator and drain tray
- TU COX *** / 2R / K - R(L)
- TU COX *** / 4R / K - R(L) – as standard
- TU COX *** / 6(8)R / K - R(L) - upon request

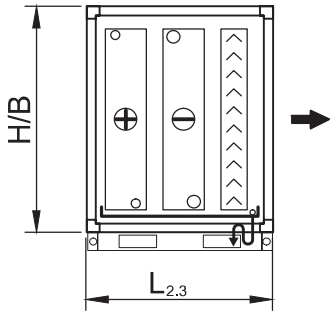

Thermal section with heat exchangers:
heating unit: 2- or 4- rows,
cooling unit: 2-, 4-, 6- or 8-rows
with drop eliminator and drain tray
- TU *** / 2R / 2R / K - R(L)
- TU *** / 2R / 4R / K - R(L) – as standard
- TU *** / 4R / 4R / K - R(L)
- TU *** / 4R / 6(8)R / K - R(L)

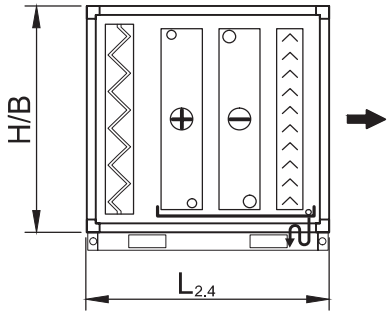

Thermal section with heat exchangers:
heating unit: 2- or 4-rows,
cooling unit: 2-, 4-, 6- or 8-rows
with drop eliminator and drain tray and air filter AFC-V (G3)
- TU *** / 2R / 2R / K/ F - R(L)
- TU *** / 2R / 4R / K / F - R(L) – as standard
- TU *** / 4R / 4R / K / F - R(L)
- TU *** / 4R / 6(8)R / K / F - R(L)

Overall and joined dimensions, weight

Model	B [mm]	H [mm]	$L_{2.1}$ [mm]	$L_{2.2}$ [mm]	$L_{2.3}$ [mm]	$L_{2.4}$ [mm]	Heat exchangers COT (2R) / COX (4R)	G″ 2R	G″ 4R	weight [kg] 2R	weight [kg] 4R	weight [kg] TM
TU *** 06	1350	950	500	600	800	1100	1000/600 - *R	1¼"	1½"	17	27	197
TU *** 09	1600	1050	500	600	1000	1300	1200/800 - *R	1½"	2½"	25	43	268
TU *** 12	1850	1150	500	600	1000	1300	1400/800 - *R	1½"	2½"	32	55	319
TU *** 16	2100	1250	500	600	1000	1300	1600/1000 - *R	2"	2½"	45	74	384
TU *** 20	2360	1350	500	600	1000	1300	2000/1000 - *R	2"	3"	52	89	452
TU *** 24	2360	1500	600	800	1200	1500	2000/1200 - *R	2½"	3"	65	106	561
TU *** 30	2360	1700	600	800	1200	1500	2000/1400 - *R	2½"	4"	75	130	620
TU *** 36	2360	1900	600	800	1200	1500	2000/1600 - *R	2½"	4"	83	144	668
TU *** 45	2360	2300	600	800	1200	1500	2000/2000 - *R	2½"	4"	103	180	773

Note:
- R(L) - Air direction from the supply side of water coil unit
- Weight of a single heat exchanger 2R or 4R
- TM – total weight of TU ** / 2R / 4R / K - R(L)
- Technical characteristics, see p.06.01-16

Unit sections

AFU - Air filter section

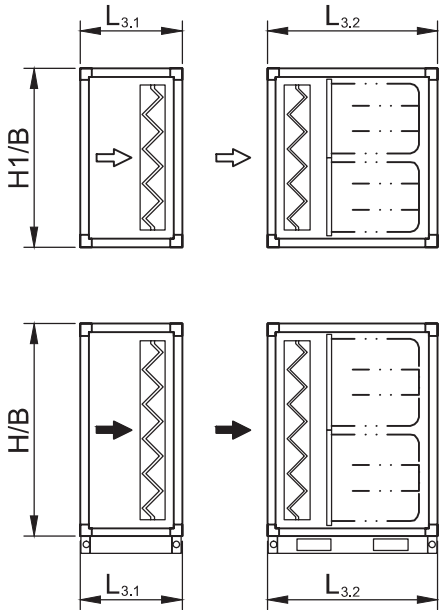

Air filter section with single or double-stage cleaning with filter cassettes type AFC-V G3 (G4) and/or bag filters type AFC-B (F6 ÷ F8).

- AFU *** / G4 / HxL - R(L)
- AFU *** / G4+F8 / HxL - R(L)

Other types filter sections – upon request

CMU - Mixing section

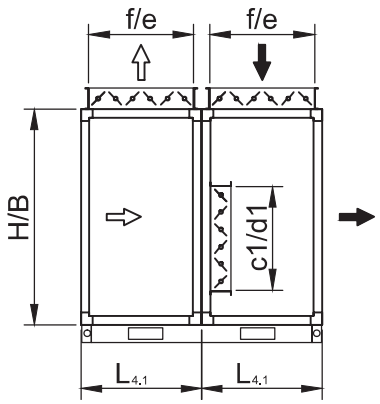

CMU *** / HxL - R(L)

Overall and joined dimensions, weight

Model		B [mm]	H [mm]	H1 [mm]	$L_{3.1}$ [mm]	$L_{3.2}$ [mm]	$L_{4.1}$ [mm]	c_1 [mm]	d_1 [mm]	e [mm]	f [mm]	TM [kg]
AFU 06	CMU 06	1350	950	1050	600	1000	600	500	400	800	300	152
AFU 09	CMU 09	1600	1050	950	600	1000	600	600	500	800	500	177
AFU 12	CMU 12	1850	1150	950	600	1000	600	800	500	1000	500	203
AFU 16	CMU 16	2100	1250	1050	600	1000	700	800	600	1200	600	229
AFU 20	CMU 20	2360	1350	1150	600	1000	700	1000	600	1400	600	258
AFU 24	CMU 24	2360	1500	1350	800	1200	850	1000	700	1600	700	327
AFU 30	CMU 30	2360	1700	-	800	1200	850	1100	700	1800	700	339
AFU 36	CMU 36	2360	1900	-	800	1200	950	1200	900	1800	800	358
AFU 45	CMU 45	2360	2300	-	800	1300	950	1400	1000	2220	800	395

Note:
- PJR - multiple leaf damper and electric motor (actuator) in section 02.09
- H1 – in double deck version AHU-DD, see p. 06.01 - 08
- TM – tentative weight of sections with length L=1000mm

Unit sections

RU-REU / RU-ROT Recuperative ((heat recovery)) section

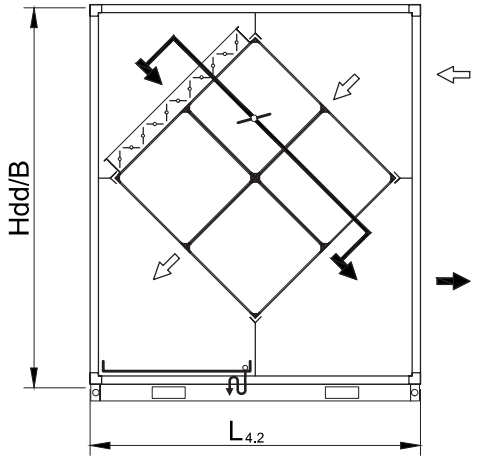

RU-REC - Recuperative section with plate heat exchanger REC-AL, drain tray and by-pass damper PJR-BP for fresh air

RU-REC ** - R(L) / L1(R1)

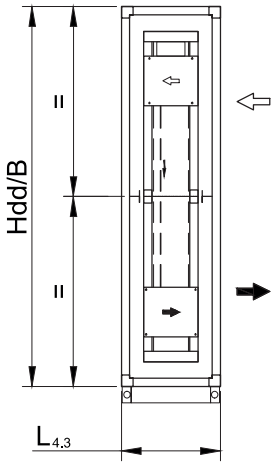

RU-ROT - Recuperative section with rotary regenerative heat exchanger with motor

RU-ROT ** - R(L) / L1(R1)

Note:

➡ Air stream direction from the inspection side: fresh air:
- R – from left to right
- L – from right to left

⇨ exhausted air:
- R1 – from left to right
- L1 – from right to left

Overall and joined dimenstions, weight

Model	Air flow V [m³/h]	B [mm]	Hdd [mm]	RU-REC					RU-ROT			
				$L_{4.2}$ [mm]	REC AL	h [mm]	A_0 [m²]	MT [kg]	$L_{4.3}$ [mm]	ROT	$N_{EL.}$ [W]	MT [kg]
RU- 06**	6000	1350	2000	2200	1200/9	840	0.83	446	600	1250	90	212
RU- 09**	9000	1600	2000	2000	1200/9	1080	1.04	512	600	1500	90	281
RU- 12**	12000	1850	2100	2000	1200/9	1280	1.24	569	600	1750	180	341
RU- 16**	16000	2100	2300	2000	1200/9	1580	1.55	644	600	2000	180	412
RU- 20**	20000	2360	2500	2000	1200/9	1920	1.86	744	600	2250	180	556
RU-REC 24	24000	2360	2850	2850	1800/9	1920	2.79	1359	-	-	-	-
RU-ROT 24	24000	2600	2850	-	-	-	-	-	1200	2500	180	776

Note:
- Heat exchanger must be protected with air filters at both streams
- RU-REC 06 with incorporated air filter AFC-Z
- Inlet section of plate heat exchanger – A_0 (m²)
- Drive motor of the rotary regenerative heat exchanger is single-phase with nominal power Nel.
- MT - weight of the recuperative section
- Efficiency of the recuperators, see p. 06.01-17

Unit sections

SAU - Sound attenuating section

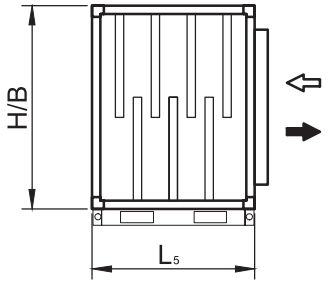

SAU ** -10/10 - HxL - R(L) – standard version

SAU ** -10/6 - HxL - R(L)

SAU ** -20/12 - HxL - R(L)

UU - Universal section

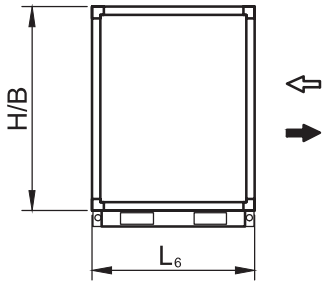

UU ** / HxL - R(L)

InU / ExhU - Inlet / outlet sections

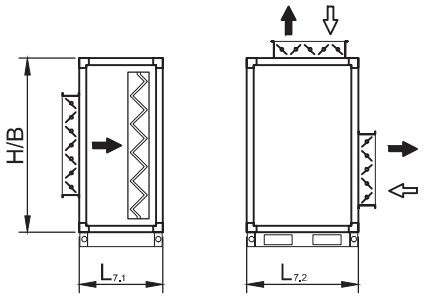

Inlet section with one or two dampers (PJR)
- InU *** / 1 - HxL - R(L)
- InU *** / 2 - HxL - R(L)

Outlet section with one or two dampers (PJR)
- ExhU *** / 1 - HxL - R(L)
- ExhU *** / 2 - HxL - R(L)

Inlet section with air filter AFC-V G3 (G4) and one or two dampers (PJR)
- InU *** / 1(2) / F+(F) / HxL - R(L)

Overall and joined dimensions, weight

Model		B [mm]	H [mm]	H_1 [mm]	L_5 [mm]	L_6 [mm]	$L_{7.1}$ [mm]	$L_{7.2}$ [mm]	MT [kg]
SAU 06	InU/ ExhU 06	1350	950	1050	600÷2000	500÷2000	600	800	217
SAU 09	InU/ ExhU 09	1600	1050	950	600÷2000	500÷2000	600	800	278
SAU 12	InU/ ExhU 12	1850	1150	950	600÷2000	500÷2000	600	800	327
SAU 16	InU/ ExhU 16	2100	1250	1050	600÷2000	500÷2000	600	1000	379
SAU 20	InU/ ExhU 20	2360	1350	1250	600÷2000	500÷2000	600	1000	435
SAU 24	InU/ ExhU 24	2360	1500	1350	600÷2000	600÷2000	800	1000	518
SAU 30	InU/ ExhU 30	2360	1700	-	600÷2000	600÷2000	800	1200	547
SAU 36	InU/ ExhU 36	2360	1900	-	600÷2000	600÷2000	800	1200	592
SAU 45	InU/ ExhU 45	2360	2300	-	600÷2000	600÷2000	800	1200	682

Note:
- For double deck version AHU-DD height of the section is H or H1
- MT - weight of the sound attenuating section SAU ** -10/10 - BxHxL=1000mm
- Dimensions of flange and dampers (PJR) have to be indicated in the order
- For weight of universal, inlet or outlet sections, please use approximate weight per meter (see p. 06.01-13)

Thermal characteristics COT / COX - counter-flow, atmospheric pressure - 710 mmHg

2-rows section		Heating mode					Cooling mode				
Model	V_{air} m^3/h	T_{air1} =-12°C, T_{water1}=80°C; T_{water2} =60°C					T_{air1} =33°C, φ=40%, T_{water1} =7°C,T_{water2} =12°C				
		Q_{heat} [kW]	T_{air2} [°C]	ΔP_{air} [Pa]	V_{water} [m^3/h]	P_{water} [kPa]	Q_{heat} [kW]	T_{air2} [°C]	ΔP_{air} [Pa]	V_{water} [m^3/h]	P_{water} [kPa]
1000/600 - 2R	6000	71.6	23.2	33	3.1	4.8	27.1	23.6	46	4.6	12.7
1200/800 - 2R	9000	108.1	23.4	29	4.6	4.1	39.4	23.7	40	6.8	10.2
1400/800 - 2R	12000	146.3	24.0	42	6.3	6.7	52.8	23.6	57	9.1	16.5
1600/1000 - 2R	16000	204.6	25.7	36	8.8	8.8	75.3	23.1	49	13.0	22.2
2000/1000 - 2R	20000	257.4	26.0	36	11.1	12.0	95.8	23.0	46	16.5	31.0
2000/1200 - 2R	24000	312.2	26.4	36	13.4	7.6	117.4	22.8	46	20.2	20.1
2000/1400 - 2R	30000	384.9	25.8	40	16.5	12.3	148.0	22.9	55	25.5	33.8
2000/1600 - 2R	36000	448.7	24.8	44	19.3	13.1	172.2	23.2	61	29.6	36.0
2000/2000 - 2R	45000	569.7	25.3	43	24.5	18.0	222.3	23.0	58	38.2	42.9
After recuperator		T_{air1} =+5°C, T_{water1}=80°C; T_{water2} = 60°C					T_{air1}=30°C, φ=45%, T_{water1} =7°C,T_{water2}=12°C				
1000/600 - 2R	6000	55.7	32.4	35	2.4	3.0	22.8	22.0	45	3.9	9.4
1200/800 - 2R	9000	83.7	32.4	31	3.6	2.6	33.0	22.1	39	5.7	7.4
1400/800 - 2R	12000	113.1	32.8	44	4.9	4.2	44.1	22.0	56	7.6	11.9
1600/1000 - 2R	16000	158.6	34.2	38	6.8	5.5	63.1	21.5	48	10.9	16.2
2000/1000 - 2R	20000	199.8	34.5	38	8.6	7.6	80.5	21.4	49	13.9	22.7
2000/1200 - 2R	24000	242.7	34.8	37	10.4	4.8	98.8	21.3	48	17.0	14.7
2000/1400 - 2R	30000	300.0	34.5	41	12.9	7.8	125.2	21.3	54	21.5	25.0
2000/1600 - 2R	36000	349.6	33.6	46	15.0	8.4	145.6	21.6	60	25.1	26.7
2000/2000 - 2R	45000	444.8	34.2	45	19.1	9.7	188.7	21.4	59	32.5	31.9

4-rows section		Heating mode					Cooling mode				
Model	V_{air} m^3/h	T_{air1} =-12°C, T_{water1}=80°C; T_{water2} =60°C					T_{air1} =33°C, φ=40%, T_{water1} =7°C,T_{water2} =12°C				
		Q_{heat} [kW]	T_{air2} [°C]	ΔP_{air} [Pa]	V_{water} [m^3/h]	P_{water} [kPa]	Q_{heat} [kW]	T_{air2} [°C]	ΔP_{air} [Pa]	V_{water} [m^3/h]	P_{water} [kPa]
1000/600 - 4R	6000	112.9	43.5	69	4.9	4.5	43.1	18.3	92	7.4	12.3
1200/800 - 4R	9000	170.9	44.0	61	7.3	2.6	64.2	18.3	81	11.1	6.8
1400/800 - 4R	12000	229.6	44.4	88	9.9	3.3	84.9	18.3	115	14.6	8.4
1600/1000 - 4R	16000	317.6	46.5	75	13.6	3.0	119.7	17.6	99	20.6	8.0
2000/1000 - 4R	20000	399.3	46.9	75	17.2	3.7	152.2	17.5	99	26.2	10.1
2000/1200 - 4R	24000	481.0	47.1	74	20.7	4.1	183.4	17.4	97	31.6	11.0
2000/1400 - 4R	30000	589.4	45.9	82	25.3	4.8	224.2	17.7	108	38.6	13.0
2000/1600 - 4R	36000	692.1	44.7	92	29.7	5.7	262.6	18.1	122	45.2	15.3
2000/2000 - 4R	45000	869.1	45.0	90	37.4	6.9	329.8	18.0	119	56.7	18.4
After recuperator		T_{air1} =+5°C, T_{water1}=80°C; T_{water2} = 60°C					T_{air1}=30°C, φ=45%, T_{water1} =7°C,T_{water2}=12°C				
1000/600 - 4R	6000	88.3	48.4	72	3.8	2.9	36.5	17.4	90	6.3	9.1
1200/800 - 4R	9000	133.4	48.7	63	5.7	1.6	54.0	17.4	80	9.3	4.9
1400/800 - 4R	12000	178.9	49.0	91	7.7	2.1	71.3	17.4	113	12.3	6.1
1600/1000 - 4R	16000	248.1	50.7	78	10.7	1.9	101.0	16.9	98	17.4	5.9
2000/1000 - 4R	20000	312.4	51.1	78	13.4	2.4	128.7	16.7	98	22.1	7.5
2000/1200 - 4R	24000	376.4	51.3	76	16.2	2.6	155.1	16.7	96	26.7	8.1
2000/1400 - 4R	30000	460.9	50.3	85	19.8	3.1	189.4	16.9	107	32.6	9.6
2000/1600 - 4R	36000	540.9	49.3	95	23.3	3.7	221.7	17.2	120	38.2	11.3
2000/2000 - 4R	45000	679.2	49.5	93	29.2	4.4	278.6	17.2	117	48.0	13.6

For some specific cases with different inlet parameters, please, contact us.