THE SILENCE OF GOOD AIR RUCTS

Invisible technology that turns every breath into everyday wellbeing



Available in Two Versions:
BASIC | EVO

- Ultra-quiet, down to 18.9 dB(A)
- More power and airflow control up to 60 m³/h (Boost)
- Airflow up to 60 m³/h
- Advanced control: Wi-Fi, app, CO_2 sensors and smart functions
- Heat recovery up to 97%
- Quiet comfort up to 32.7 dB(A)

brofer.it

We spend most of our time indoors, often without realizing the quality of the air we breathe. CO_2, humidity and indoor pollutants affect comfort, concentration and overall wellbeing.
RUCTS was created to improve air quality in living spaces continuously, quietly and naturally-creating healthier, more comfortable environments, day after day.

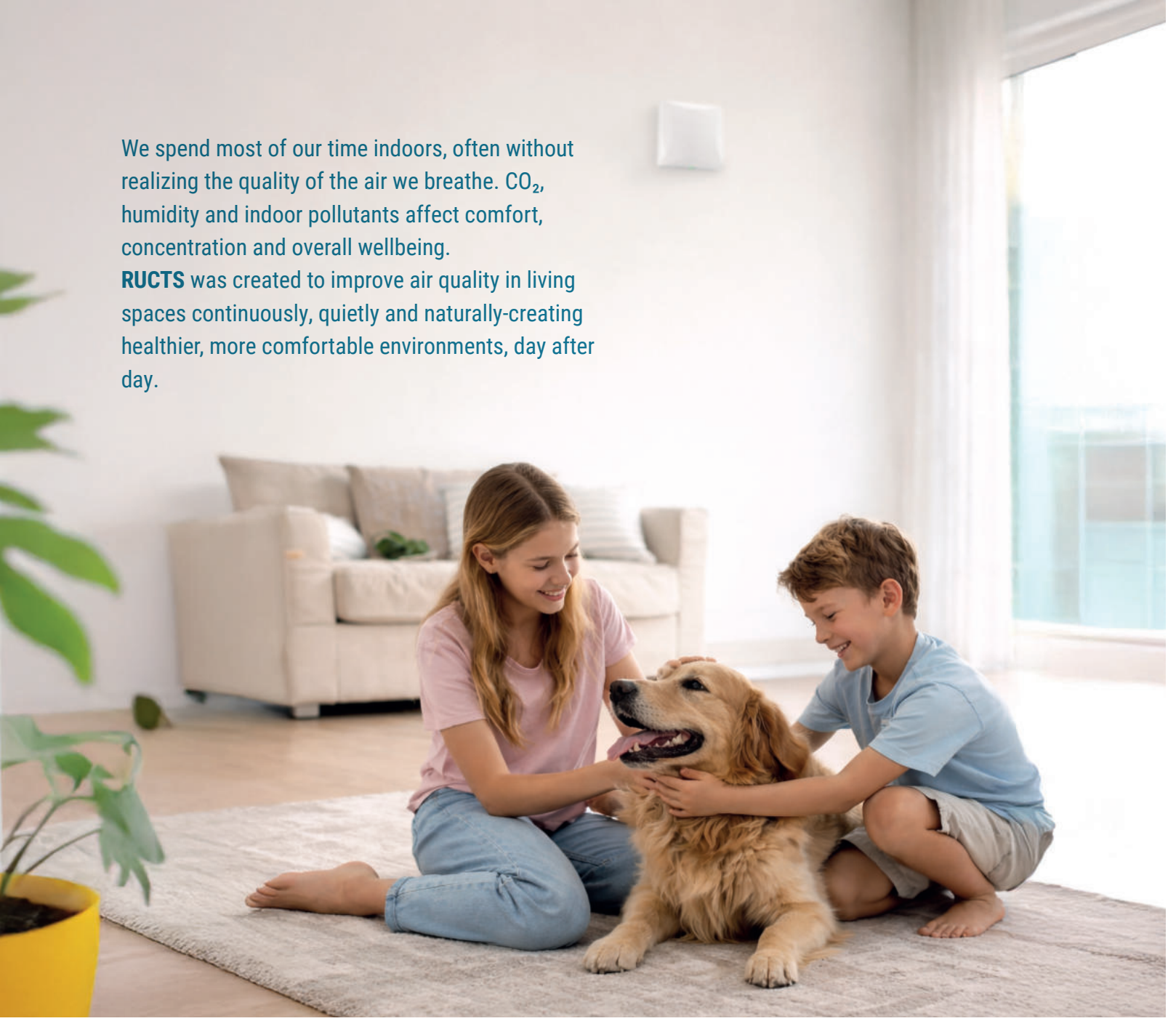

THE SILENCE THAT IMPROVES REST

During sleep, air quality and noise level become decisive for wellbeing. A space that is too closed, poorly ventilated or noisy can compromise the quality of rest, even if we don't notice it. **RUCTS** works discreetly and continuously, ensuring constantly renewed air without disturbing the silence of the night. Hidden inside the wall, the system operates at extremely low noise levels, creating ideal conditions for deeper, more restorative sleep.

Sleeping well isn't just about comfort.
It's about air.

SMART AIR EXCHANGE, IN EVERY SEASON

RUCTS ensures continuous indoor air renewal through an alternating-flow ventilation system with energy recovery. Stale air is extracted and passes through a ceramic core that stores heat and humidity. The airflow then reverses: filtered outdoor air passes through the core, recovering the stored energy before being supplied back into the room. This cyclical process improves indoor air quality while maintaining high thermal comfort, reducing energy losses and ensuring a more balanced climate all year round.

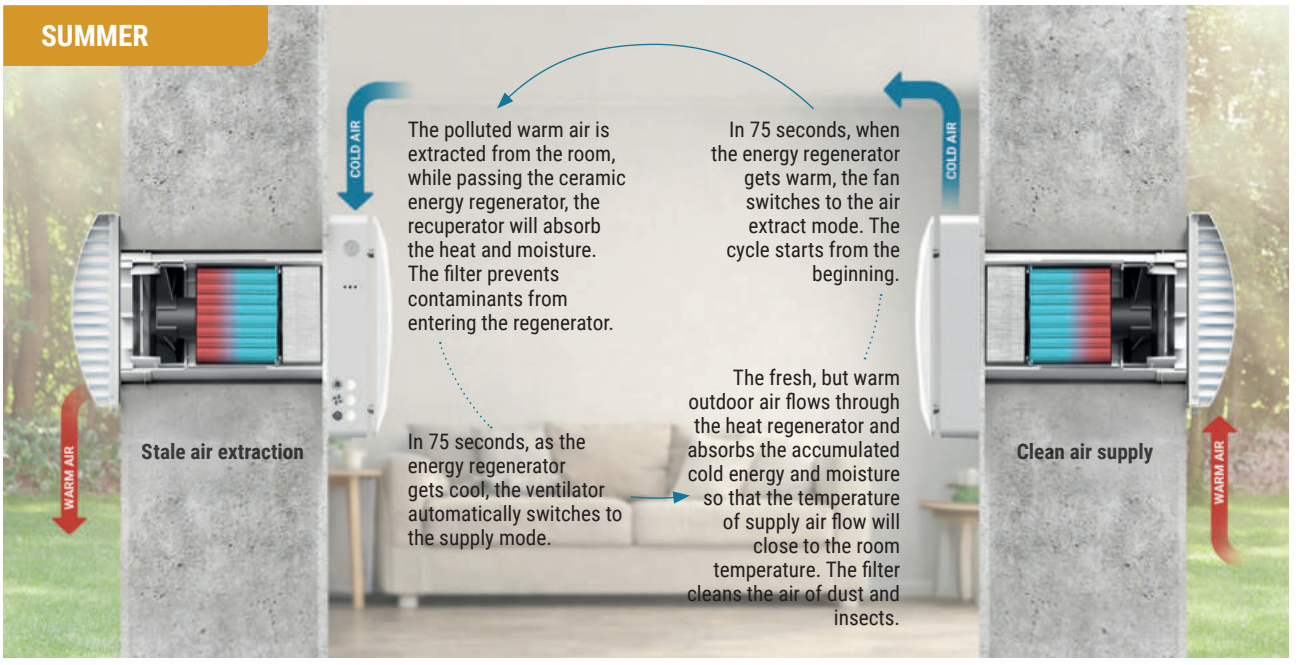

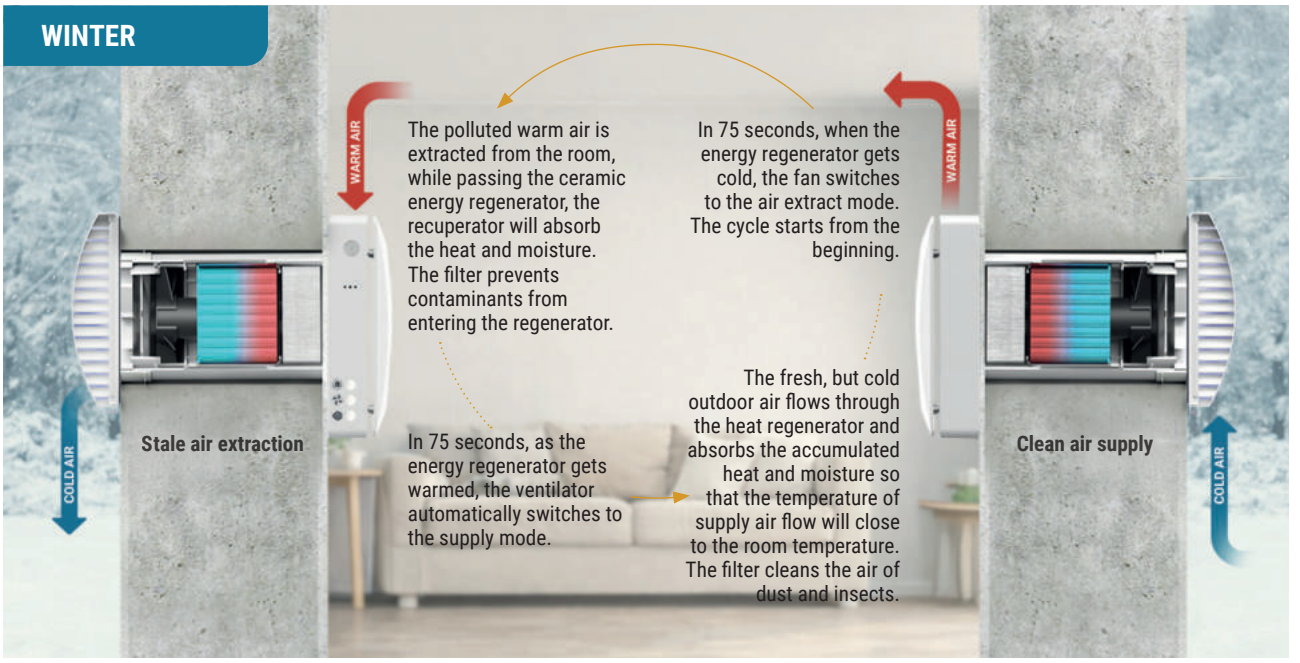

The result is a healthier, more comfortable, always well-ventilated environment.without opening the windows.

RUCTS BASIC





FRONT PANEL

Designed to blend into the room, the front panel has a smooth, modern surface that looks more like a design element than a device: a silent upgrade for any wall.



AUTOMATIC DAMPER

Integrated into the design, the automatic damper gently closes when the unit stops, preventing dust, insects and cold drafts from entering-while maintaining a clean, uniform appearance.



HIGH-EFFICIENCY ENERGY REGENERATOR

Featuring a hygienically treated ceramic core, the regenerator recovers up to 97% of thermal energy, with honeycomb or bead options for the ideal balance of performance, purity and comfort.

- Scene control
- Timer
- Filter alarm
- Free cooling
- Fan boost function
- Easy installation
- Indoor air quality monitor
- Automatic damper
- High energy efficiency
- Humidity prevention
- Quiet ducted fan
- High-efficiency regenerator

DIMENSIONS

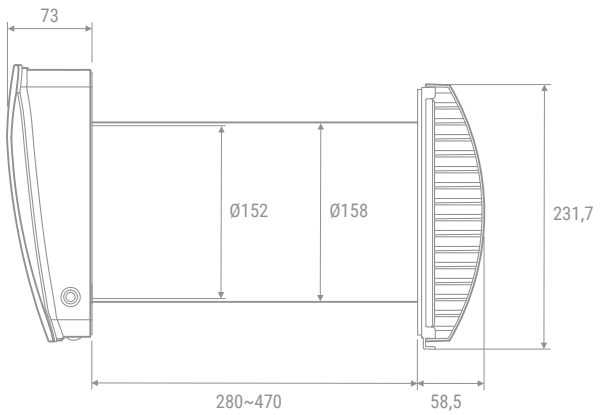

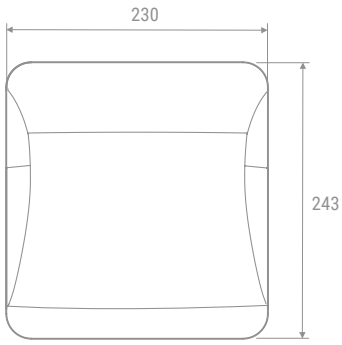

TECHNICAL SPECIFICATIONS

Voltage		100V ~ 240V AC / 50–60Hz	
Power consumption (W)	4,7	5,6	6,5
Airflow rate (L/M/H) (m³/h)	30	50	60
Sound pressure level dB(A)	18,9	25,2	28,7
Heat recovery efficiency		Up to 97%	
SEC		Classe A+	
RPM (max)		2200	
Duct diameter (mm)		158	
Net weight (kg)		3,9	



RUCTS EVO

97 up to % Heat recovery efficiency



ErP 2018 COMPLIANT





ELEGANCE THAT BLENDS IN
An optional fabric cover is available for a warmer, more discreet and refined aesthetic integration in residential interiors.

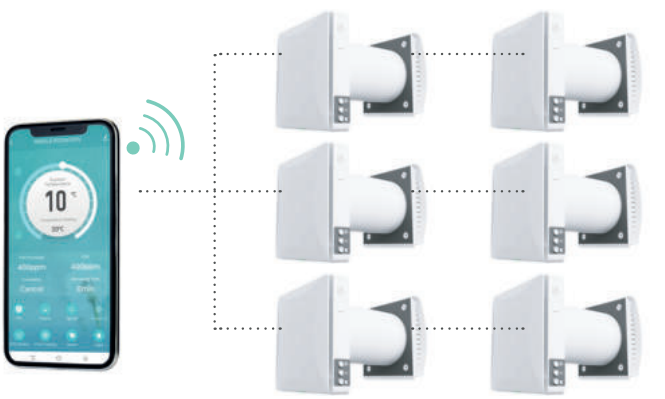

GROUP CONTROL
The fan allows group control via the app, with no limit on the number of units. Users can easily manage all fans belonging to the same group.

- Multi-link control
- Timer
- Filter alarm
- Fan boost function
- Scenario control
- Wireless pairing
- Free cooling
- Group control
- Indoor air quality monitor
- Automatic damper
- Paired operation
- High energy efficiency
- Mould prevention
- Easy installation
- Quiet ducted fan
- High-efficiency regenerator

DIMENSIONS

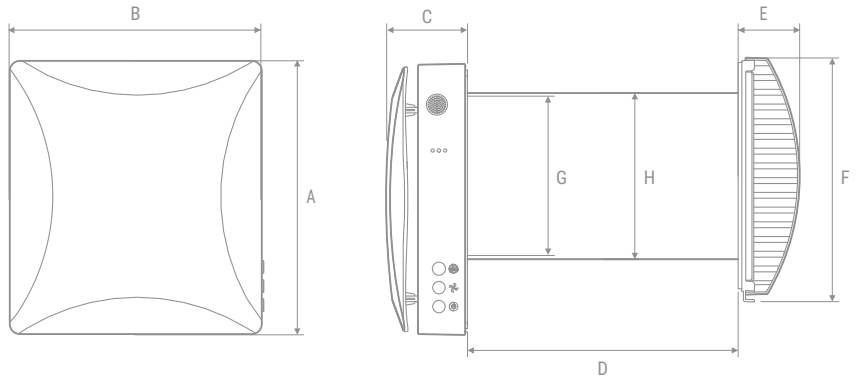

	100	160
A	263,5	263,5
B	239,4	239,4
C	77,5	77,5
D	270~500	280~470
E	58,5	58,5
F	231,7	231,7
G	Ø100	Ø 151,2
H	Ø110	Ø 158

TECHNICAL SPECIFICATIONS

	RUCTS EVO 100			RUCTS EVO 160		
Voltage	100V ~ 240V AC / 50-60Hz			100V ~ 240V AC / 50-60Hz		
Power consumption (W)	4	5,9	7	6	7	7,8
Airflow rate in supply/extract mode (m^3/h / CFM)	10	20	25	20	40 **(with F7 filter)**	50
				11,8	**23,5**	**29,4**
Maximum airflow rate (boost mode) (m^3/h / CFM)	30			60 **(with F7 filter) 35,3**		
Sound pressure level (dBA)	31,2			32,7		
Heat recovery efficiency	Up to 97%			Up to 97%		
SEC	Classe A			Classe A		
Protection	IPX4			IPX4		
RPM (max)	2950			2200		
Duct diameter (mm)	110			158		
Net weight (kg)	2,7			4,2		

MAIN COMPONENTS

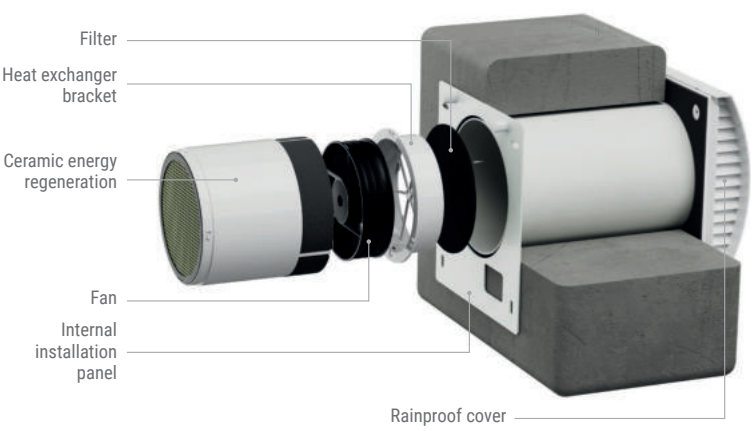

AIR FILTERS

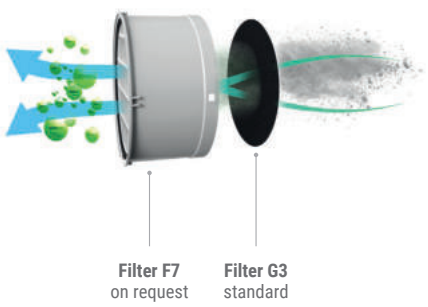

Filter F7 on request

Filter G3 standard



Good air has become home!

BROFER srl
Via Roma, 66
31023 Resana (TV) Italy
Tel. +39 0423 716611
info@brofer.it

Milan branch
Via E. De Amicis, 59
20092 Cinisello Balsamo (MI)
Tel. +39 02 66017390
ordinimi@brofer.it

AFFILIATES

JANNONE DST SRL - Napoli
Via dei Platani | Angolo Via Palazziello sn
80040 z.i. PIP Sebeto VOLLA (NA)
Tel. +39 081 19330200 | info@jannonedst.it

ERREGI SRL - Cuneo
Frazione S. Bernardo | Via Fossano, 128
12041 Bene Vagienna (CN)
Tel. +39 0172 655306 | info@erregi-cn.it
www.erregi-cn.it

STEAM.COM SRL - Roma
Via Carlo Poma, 9A | 00071 Pomezia (Roma)
Tel. +39 06 913 2941 | commerciale@steamcom.it
Retail store: Via Montenero, 64
00012 Guidonia Montecelio (Roma)
Tel. +39 0774 572878 | filialeguidonia@steamcom.it

SBI STEEL INDUSTRY SRL - Romania
13 Aurel Vlaicu Street | 077010 Afumati | Ilfov Romania
Tel. +40 755 023534 | www.sbi-steel.ro