IT

Decentralized heat recovery unit
User manual

RUCTS BASIC

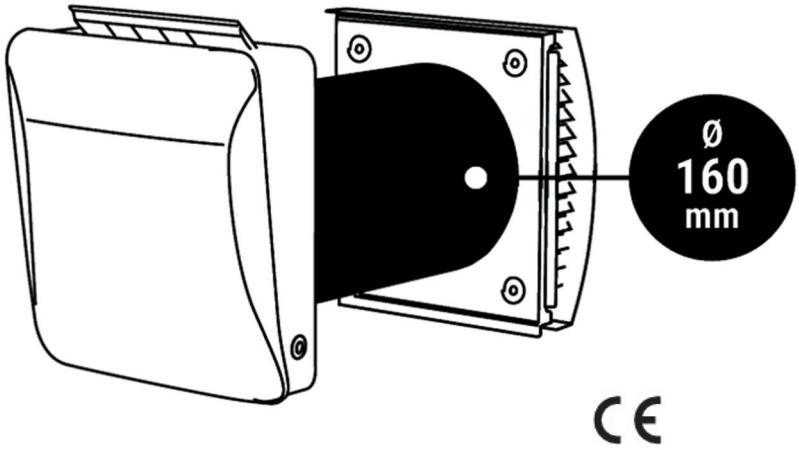

CE

EN

Instructions Manual for users and qualified installers

Summary

SAFETY REQUIREMENTS ---- 3
INTRODUCTION ---- 5
USE ---- 6
PACKAGE CONTENTS ---- 6
MAIN TECHNICAL PARAMETERS ---- 7
DESIGN AND OPERATION ---- 8
INSTALLATION INSTRUCTIONS ---- 9
OPERATING DESCRIPTION ---- 13
REMOTE CONTROL ---- 15
PAIRING FUNCTION ---- 16
RESET AND DELETION OF THE MAIN AND SECONDARY UNITS ---- 17
IoT NETWORK CONFIGURATION AND APP INTERFACE ---- 18
WI-FI NETWORK RESET AND DELETION ---- 21
FACTORY RESET ---- 22
MAINTENANCE AND CLEANING ---- 23
STORAGE AND TRANSPORT REQUIREMENTS ---- 24
TROUBLESHOOTING ---- 25

➢ SAFETY REQUIREMENTS

- Read the user manual carefully before operating or installing the energy recovery unit.
- The installation and operation of the unit must be carried out in accordance with this user manual, as well as with all applicable local and national building, electrical, and technical codes and regulations.
- The warnings contained in this user manual must be taken seriously, as they include vital information for personal safety.
- Failure to follow the safety instructions may result in personal injury or damage to the unit.
- Read the manual carefully and keep it for the entire period of use of the unit.
- This appliance may be used by children aged 8 years and above, and by persons with reduced physical, sensory, or mental capabilities, or lacking the necessary experience and knowledge, only if they are supervised or have been instructed on the safe use of the appliance and understand the hazards involved.
- Do not allow children to play with the appliance.
- Do not allow children to clean or maintain the appliance without supervision.
- If the power supply cord is damaged, it must be replaced by the manufacturer, a service technician, or a similarly qualified person in order to avoid hazards.
- It is recommended to install the fan at a height greater than 2.1 m above the floor.
- Take the necessary precautions to prevent flue gases from flowing back into the room from open gas flues or other fuel-burning appliances.
- Exhaust fans may adversely affect the safe operation of gas-burning or other fuel-burning appliances (including those located in other rooms) due to the backflow of combustion gases. These gases can cause carbon monoxide poisoning. After the unit has been installed, the operation of any open-flue gas appliance must be tested by a competent person to ensure that no backflow of combustion gases occurs.
- Do not recharge non-rechargeable batteries.
- Batteries must be inserted with the correct polarity.
- Remove used batteries from the appliance and dispose of them safely.
- If the appliance is not used for an extended period of time, remove the batteries.
- Do not short-circuit the power terminals.
- Pay close attention to the remote control to prevent children from swallowing the batteries and causing accidents.

Instructions Manual for users and qualified installers

➢ Symbols used in this manual

	**WARNING!**
	**DO NOT DO THIS!**
	The unit must be disconnected from the power supply before installation or repair.
	Do not use damaged equipment or conductors to connect the unit to the power supply.
	The unit must not be operated outside the temperature range specified in the user manual or in an aggressive or explosive environment.
	During installation of the unit, follow the safety regulations specific to the use of power tools.
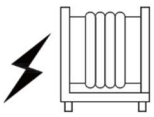	Do not place heating devices or other equipment near the unit's power cord.
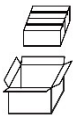	Unpack the unit carefully.
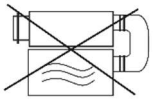	Use the unit only as intended by the manufacturer.

Instructions Manual for users and qualified installers

➢ Safety precautions for installing the unit

 Do not touch the controller or the remote control with wet hands. Do not perform maintenance on the unit with wet hands.	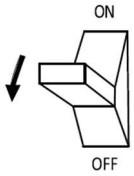 Disconnect the unit from the power supply before performing maintenance.
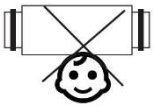 Do not allow children to operate the unit.	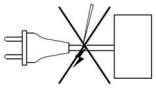 Do not damage the power cord while the unit is operating. Do not place objects on the power cord.
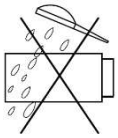 Do not clean the unit with water. Protect the electrical parts from water ingress.	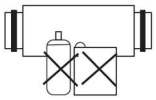 Keep explosive and flammable products away from the fan.
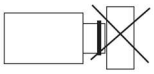 Do not obstruct the air duct when the fan is running.	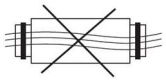 Do not open the unit while it is operating.
	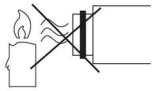 Do not direct the air from the unit toward open flames or candles.

➢ INTRODUCTION

This user manual includes the technical description of the operation, the installation and assembly guidelines, and the technical data of the heat recovery unit.

➢ USE

- The unit is designed to exchange air in apartments, villas, hotels, cafés, and other residential and public buildings. The unit is equipped with a ceramic heat exchanger and a fan that supplies fresh air and extracts stale air with energy recovery.
- The unit is designed for wall mounting. The unit's telescopic design allows installation on walls with a thickness from 280 mm to 470 mm.
- The unit is designed for continuous operation while remaining permanently connected to the power supply.
- The air being transported must not contain flammable or explosive mixtures, chemical vapors, coarse dust, soot and oil particles, sticky substances, fibrous materials, pathogens, or other harmful substances.



The installation and connection operations must be carried out only by adequately qualified personnel after receiving the appropriate safety instructions. The unit's installation sites must be secured to prevent access by unattended children.

➢ PACKAGE CONTENTS

Heat recovery unit	1 pc
Accessory bag	1 pc
Remote control	1 pc
User manual	1 pc
Packaging box	1 pc

➢ MAIN TECHNICAL PARAMETERS

- The unit is designed for indoor applications with an ambient temperature between -20°C and +50°C, with a relative humidity below 80%.
- The unit is classified as a Class II electrical appliance.
- The unit's design is subject to continuous improvements; therefore, some models may differ slightly from those described in this manual.

Descrizione	Unità	Valore
Voltage	V	100-240
Frequency	Hz	50/60
Input power	W	4.7/5.6/6.5
Airflow rate (L/M/H)	m^3/h	30/50/60
Sound pressure level	dB(A)	18.9/25.2/28.7
Heat recovery efficiency	%	up to 97
Air duct diameter	mm	158
SEC	-	A+ Class
Mounting type	-	wall mounting
Net weight	kg	3.9

Note: The airflow rate in supply/exhaust mode with an F7 filter is approximately 11.8/23.5/29.4 m^3/h, and the corresponding parameters will be adjusted accordingly.

Overall unit dimensions (mm)

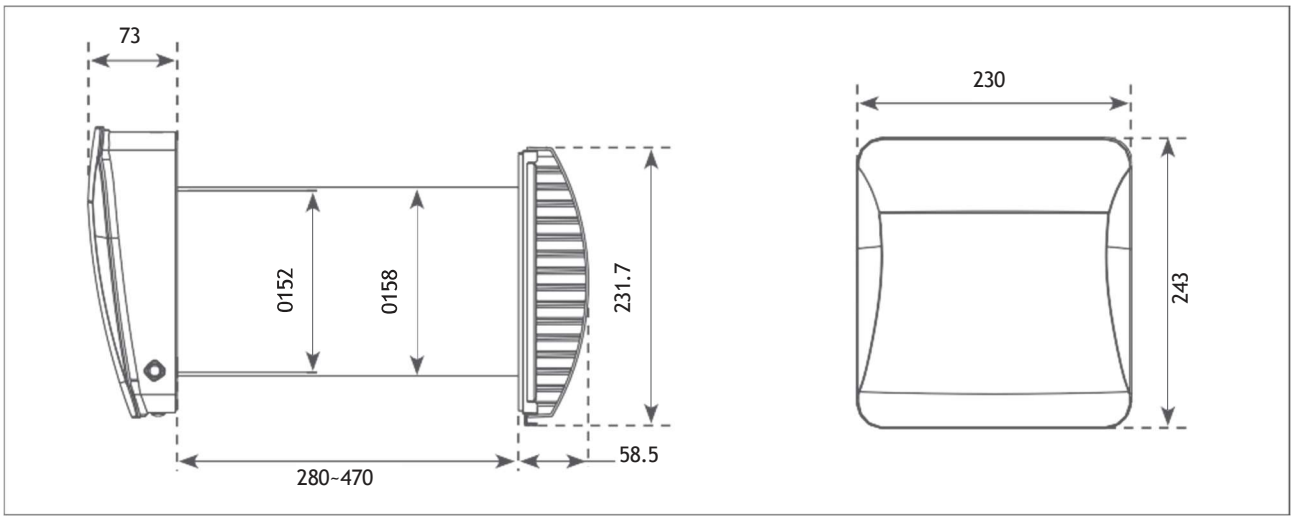

Instructions Manual for users and qualified installers

➢ DESIGN AND OPERATION

- The unit consists of a telescopic air duct with an adjustable length, determined by the position of the inner air duct within the outer air duct, the ventilation unit, and the ventilation hood.
- The pre-filter and the ceramic heat exchanger are located inside the inner duct. The filters are designed to purify the supply air and prevent foreign objects from entering the heat exchanger and the fan.
- The ceramic heat exchanger extracts energy from the exhaust air to heat or cool the supply air.
- The heat exchanger is equipped with an internal pull cord to facilitate its removal from the fan. The heat exchanger is installed on an insulating material that also serves as a sealing element.
- The fan is designed to be installed from the interior side of the wall.

Operatinf modes

Supply/exhaust mode: The unit operates in supply or exhaust air mode at the selected speed.
Recovery mode: The unit alternates between supply and exhaust air every 75 seconds to ensure proper heat and moisture recovery. In this case, the winter operating principle is used as an example.
Interval 1: Warm, polluted air is extracted from the room and passes through the ceramic heat exchanger, which gradually absorbs heat and moisture.
Intervallo 2: Fresh, cold outdoor air passes through the heat exchanger and absorbs the accumulated heat and moisture. After 75 seconds, when the heat exchangers cools down, the unit switches to exhaust mode.

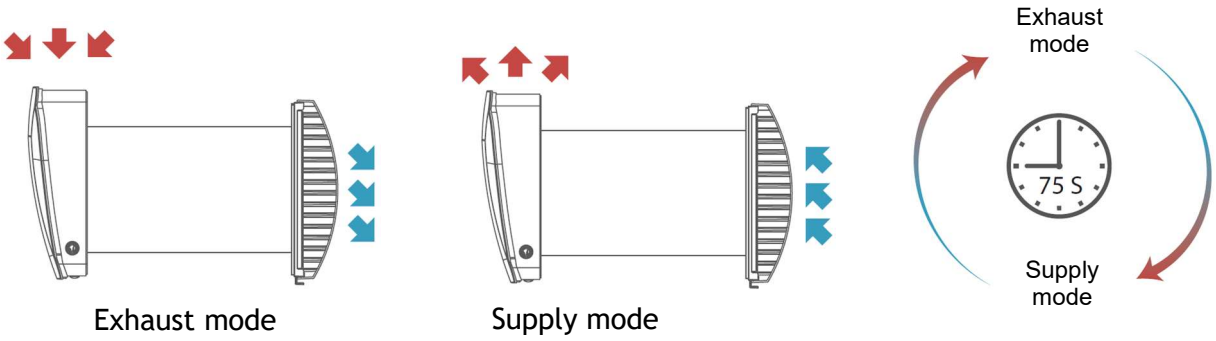

Read the user manual before installing the unit. To prevent dust accumulation in the environment, the unit must not be installed in locations where the air duct could be obstructed by curtains, drapes, etc. Curtains may block the normal airflow in the room, making the unit operate inefficiently.

Instructions Manual for users and qualified installers

1. Verify that the wall thickness is compatible with the product, insert the outer duct into the wall, and ensure that the air inlet and outlet are correctly oriented downward.

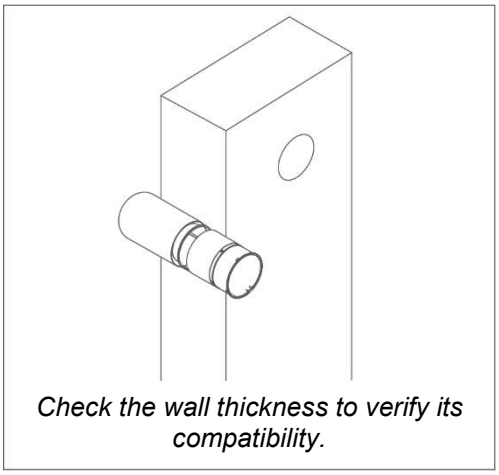

Check the wall thickness to verify its compatibility.

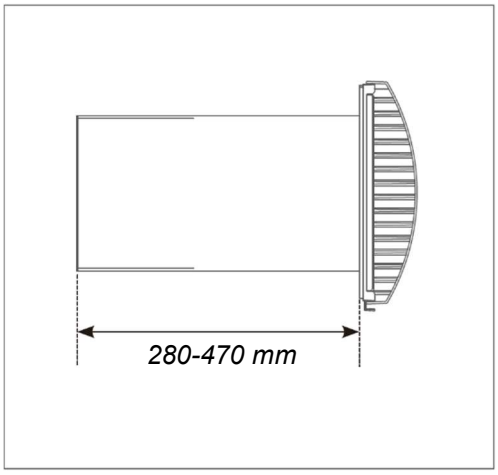

2. Drill a 170 mm hole in the wall with a slight downward slope. Ensure a minimum distance of 50 cm between the edge of the hole and the ceiling.

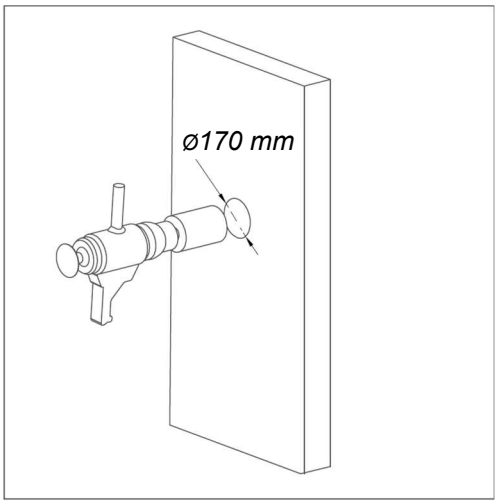

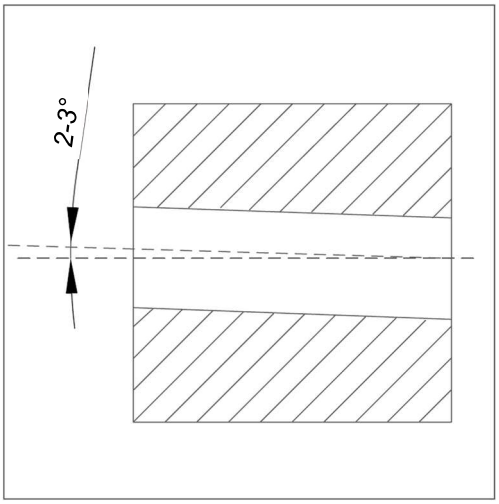

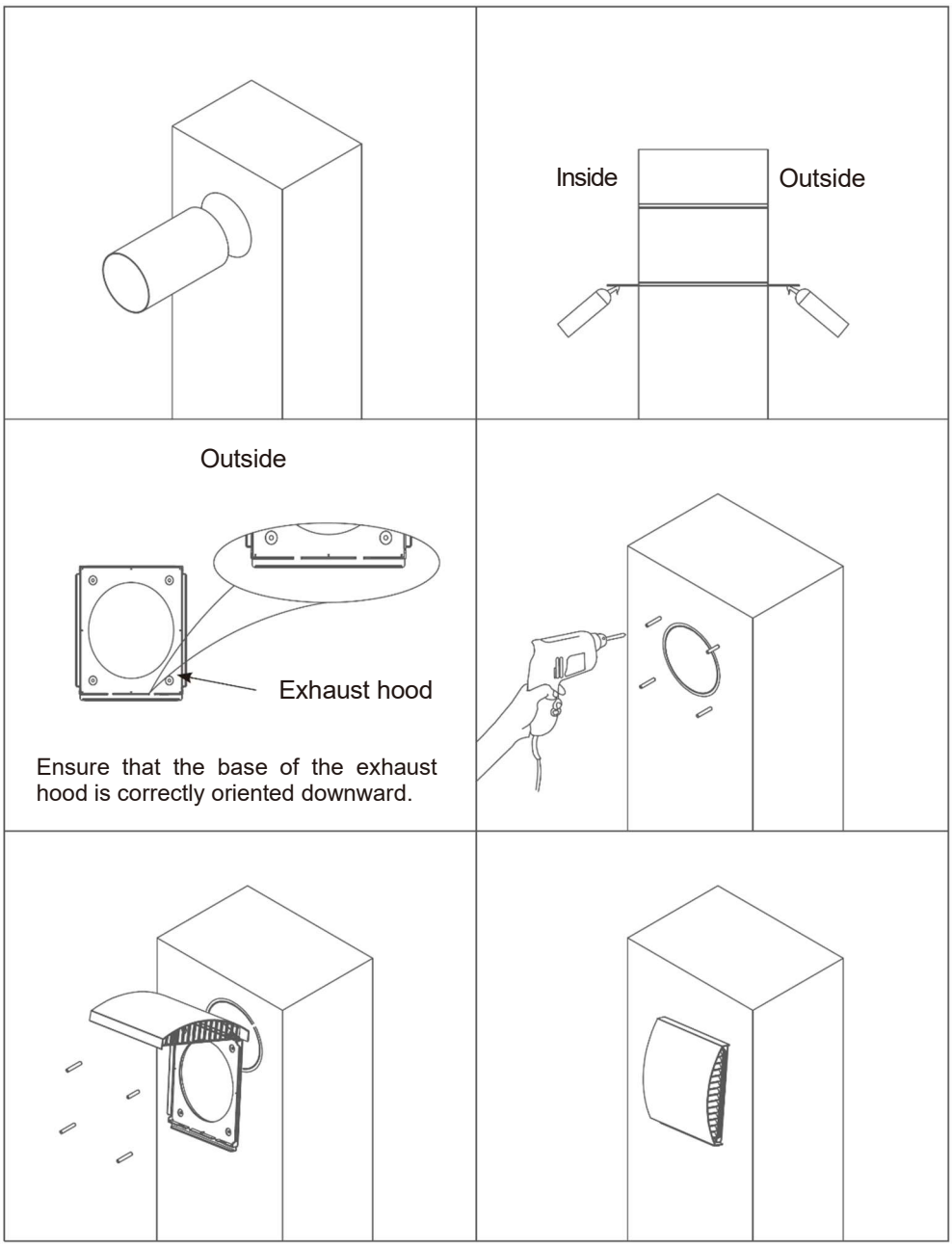

3. Use PU foam to fill the gap between the PVC pipe and the wall.
4. Remove the exhaust hood and separate it into the base and the cover. Align the rain hood base with the wall opening (pay attention to the installation direction of the base as shown in Figure 1), then mark the four punching positions.
5. Punch the holes according to the marked punching positions.
6. Use plastic anchors and screws to secure the base.
7. Align the latch on the cover with the slot on the base to tighten it (pay attention to the arrow marking on the cover: when the base and cover are properly matched, the arrow must point downward).

Instructions Manual for users and qualified installers

➢ Installation instructions

1. Remove the front panel, align the unit's air outlet with the wall duct, mark the screw holes, and then secure the unit to the wall.

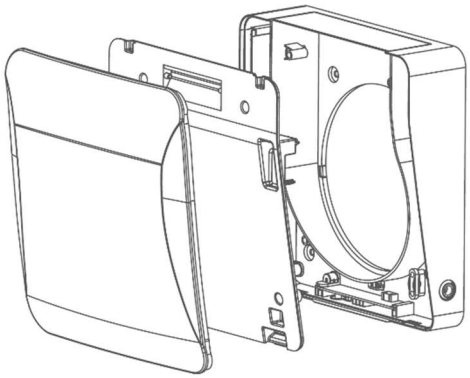

1 Remove the external panel of the main unit. 	2 Unscrew the four screws on the mounting plate inside the main unit. 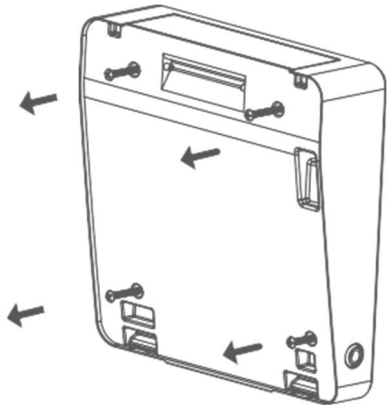
3 Align the main unit with the wall holes and mark the positions. 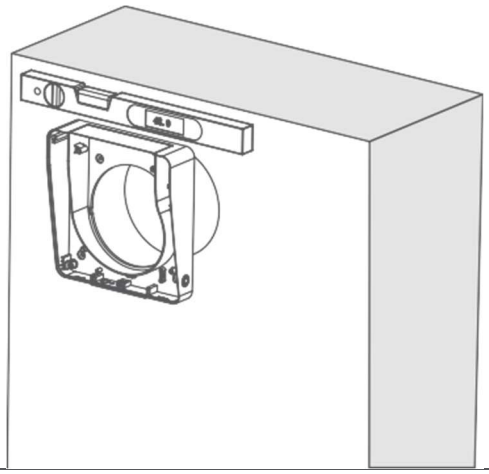	4 Secure the main unit to the wall using the wall plugs and screws from the accessory kit. 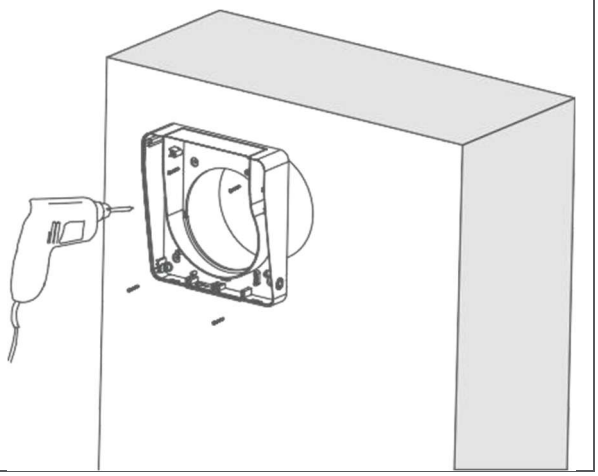

2. Insert the module and connect the fan cables. Finally, reinstall the mounting plate in the main unit, tighten the four screws, and reattach the front panel to complete the installation.

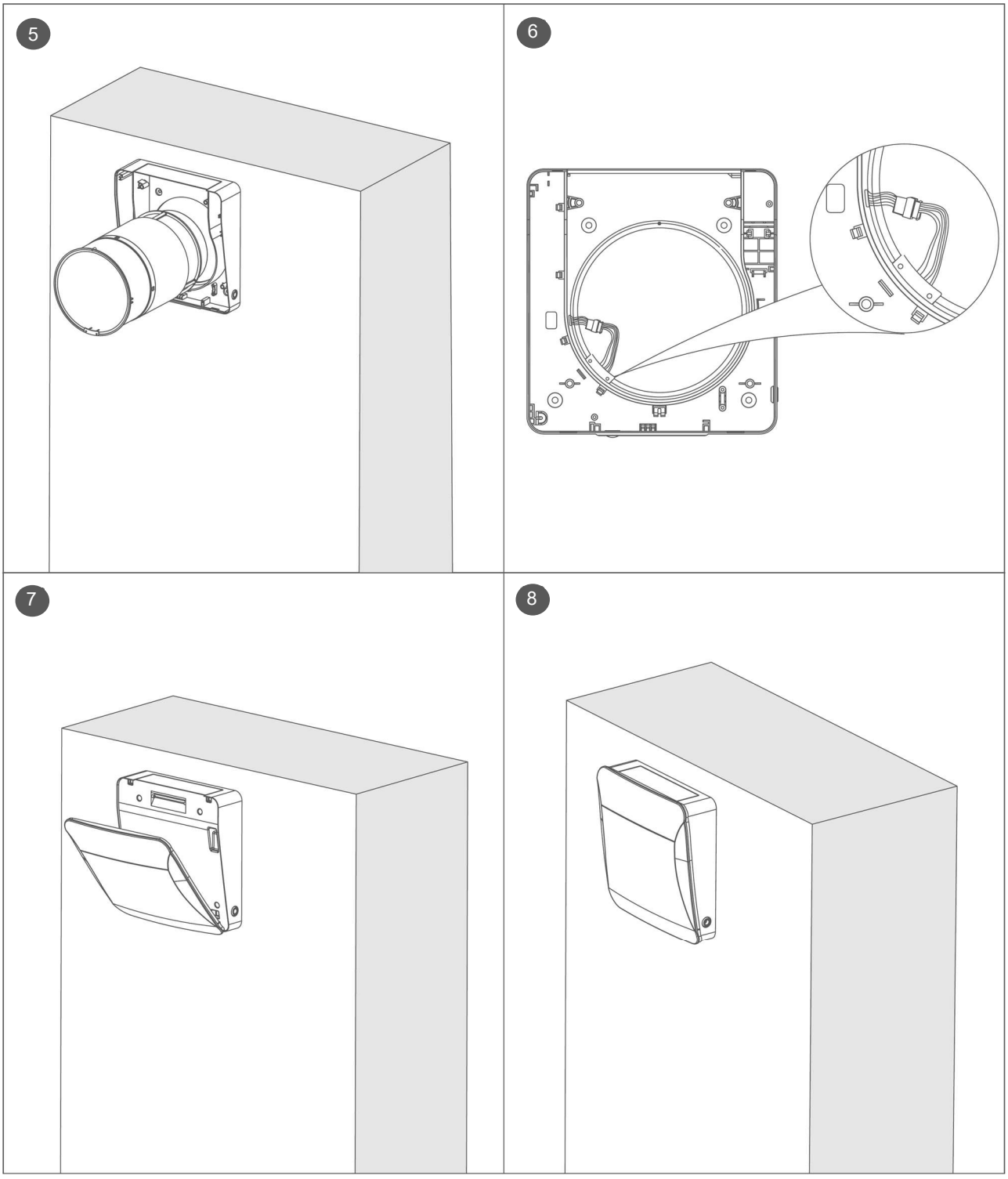

➢ Function description

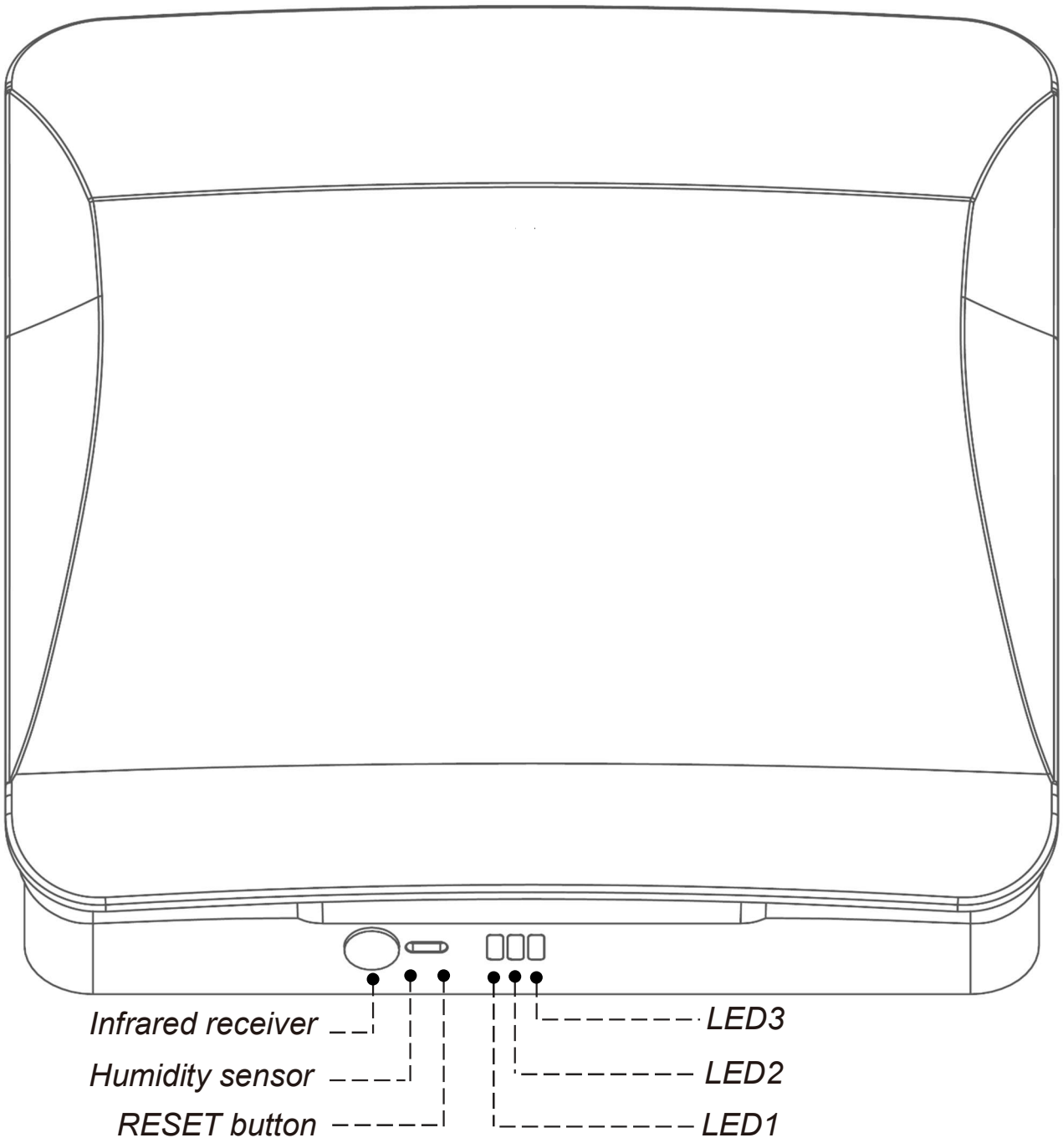

This product does not come with a SIM eject tool. This button can only be operated using a SIM eject pin or another pin-shaped tool with a diameter of less than 2 mm.

Button operation

1. Press the RESET button briefly: Select speed 1 / speed 2 / speed 3 / circular shutdown.

ON shutdown state:

1. Press the RESET button for 3 seconds: the fan enters Wi-Fi connection mode. LED1 flashes green, then flashes rapidly four times to indicate that the Wi-Fi connection is established.
2. Press the RESET button for 12 seconds to reset the filter alarm. LED1 will flash red rapidly three times.
3. Press the RESET button for 15 seconds to restore the factory settings. LED1 (red), LED2 (green), and LED3 (blue) will flash rapidly four times to indicate that the factory reset is complete.

Status light (RGB-LED)

Power-on status:

1. Green light: Supply air mode.
2. Red light: Exhaust air mode.
3. Blue light: Recovery mode.
4. Blue flashing light: Humidity-activated exhaust mode.
5. Red flashing light: Filter-cleaning reminder (960 hours).
6. LED 1 flashes red rapidly four times: Filter timer reset.

Instructions Manual for users and qualified installers

➢ REMOTE CONTROL FUNCTIONS

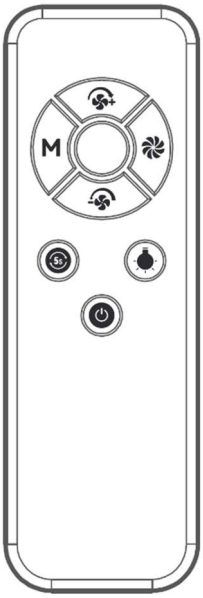

1. **Speed +** / **-**: Adjusts the fan to 3 speeds.
2. **Mode switch:** Changes the operating mode.
3. **Light ON/OFF:** Enables/disables the LED indicators.
4. **Boost mode:** Activates the fan's boost mode; the fan will run at maximum speed for 30 minutes if no other operation is performed.
5. **Filter alarm reset:** After cleaning the filter, press this button for 5 seconds to reset the filter alarm. LED1 will flash red three times.
6. **Power ON/OFF:** Turns the unit on or off.

REMOTE CONTROL INSTRUCTIONS

1. Insert the batteries before use. Close the battery cover until it clicks into place.
2. After inserting the batteries, fully secure the cover.
3. To remove the batteries: Push the cover to unlock it, then remove it.

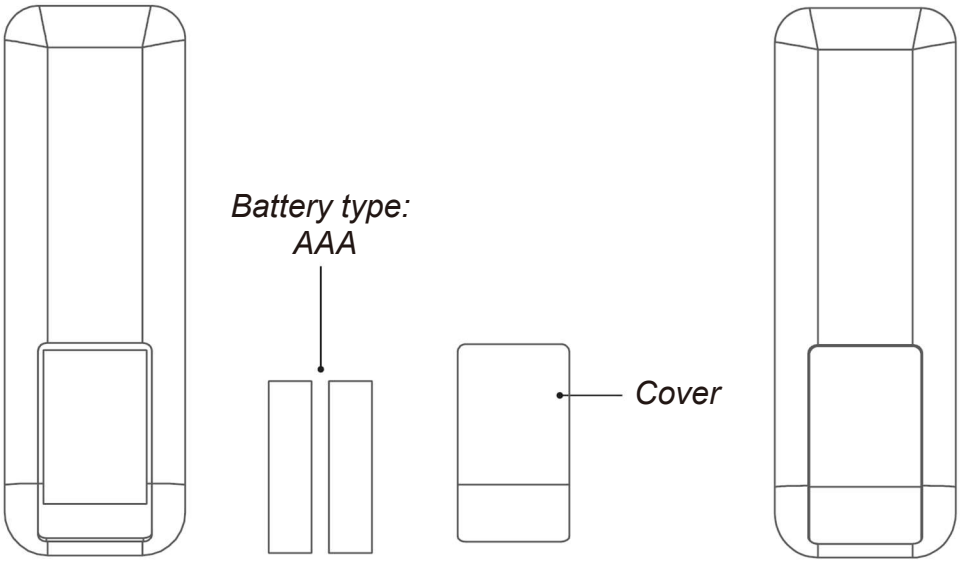

Keep out of reach of children. Batteries pose an ingestion hazard.

➢ REMOTE CONTROL FUNCTIONS

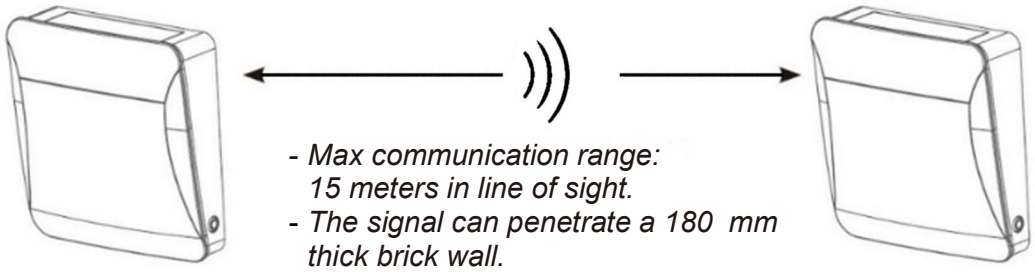

- *Max communication range: 15 meters in line of sight.*
- *The signal can penetrate a 180 mm thick brick wall.*



1. *One remote control can operate multiple units if no roles are assigned.*
2. *After assigning the roles, only the Leader unit responds to the remote control. The Follower units execute the commands issued by the Leader.*
3. *In recovery mode, the Follower fan rotates in the opposite direction to the Leader; in all other modes, it operates in the same direction.*

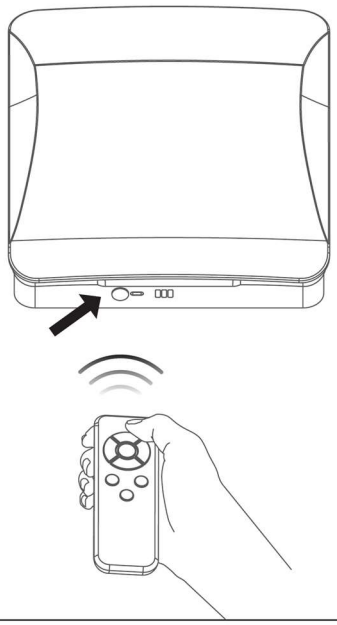

Note: Make sure the remote control is pointed toward this area during operation.

Leader unit settings

Press and hold the reset button for 6 seconds. The LED1 blue indicator will start flashing, indicating that the device has entered pairing mode as a Leader.

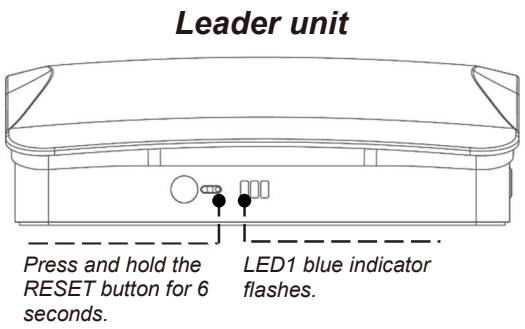

Follower unit settings

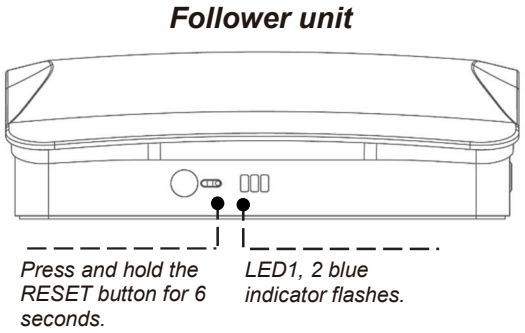

1. In standby, press and hold the reset button for 9 seconds. The blue LED1 and LED2 indicators will start flashing, indicating that the device has entered pairing mode as a Follower.
2. The pairing process between the Leader and Follower must be completed within 1 minute, and the units must be placed close to each other.
3. Once the pairing is successfully completed, the Leader unit's LED1 will flash rapidly three times and then turn off.
4. In case of a failed pairing, the LED indicators on each unit will flash for one minute and then turn off automatically.

Function	Frequency	Power
Pairing function	433 MHz	- 54 dbm
WI-FI function	2,4 GHz	18,7 dbm

➢ RESET AND DISABLE LEADER-FOLLOWER

Press and hold the reset button on a previously paired unit for 6 seconds. LED1 will begin flashing blue, indicating that the device has entered Leader–Follower pairing mode and is now set as the Leader unit. All units performing this procedure within 1 minute will also be defined as Leaders. If no Follower device is detected within this time, the LED will turn off automatically and the device will exit pairing mode with no role assigned.

➢ IoT NETWORK CONFIGURATION AND APP INTERFACE (OPTIONAL)

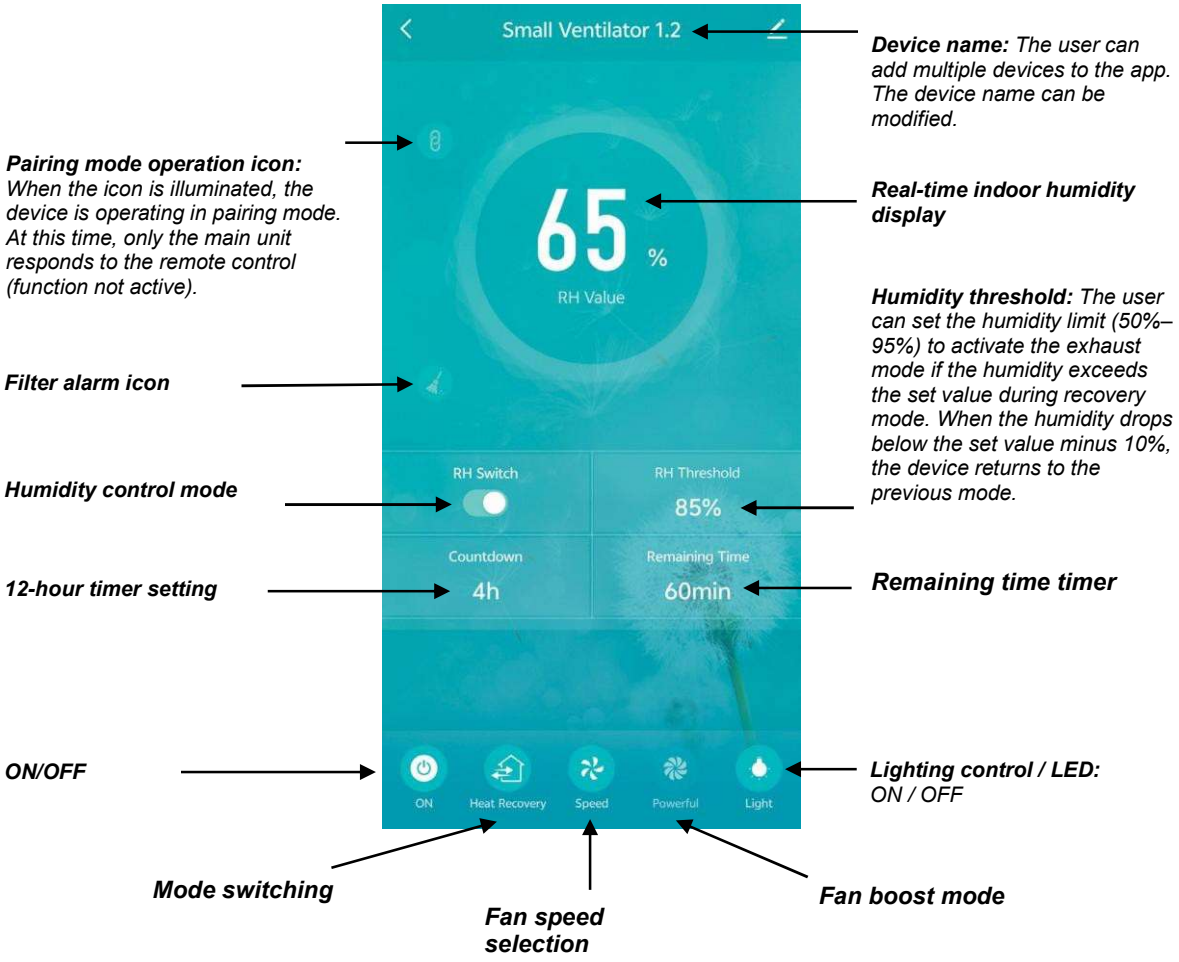

Instructions for downloading the App

Scan the QR code on the right to download the app, or search for “Smart Vent” in the Apple Store or Google Play Store to install it. Then use the device’s Wi-Fi connection to control the unit through the mobile app.

IoT network configuration operating steps

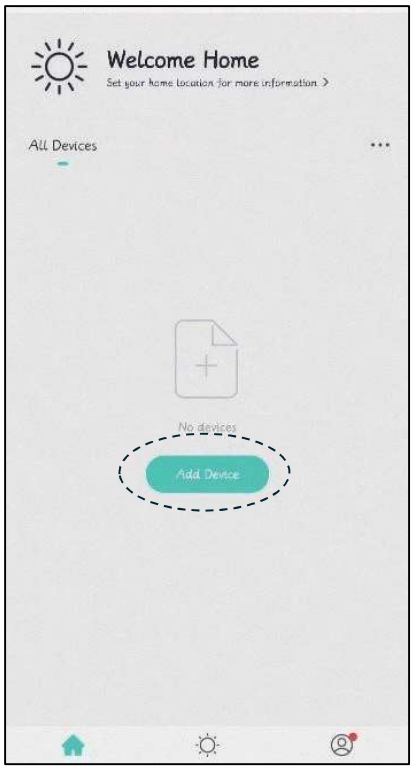

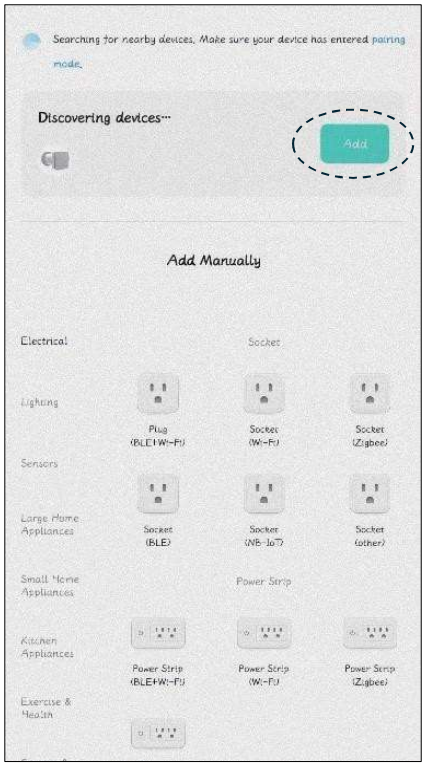

1. Before enabling IoT network operation, connect the mobile phone to the home Wi-Fi router, enable the phone's Bluetooth function, and ensure that both the device and the mobile phone are within the Wi-Fi signal coverage (make sure the Wi-Fi router supports the 2.4G network).

2. In standby mode, press and hold the reset button for 3 seconds. The green LED1 will start flashing, indicating that the product has entered Wi-Fi configuration mode. The user can now connect to and control the device via smartphone.

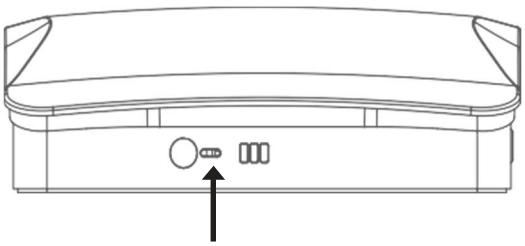

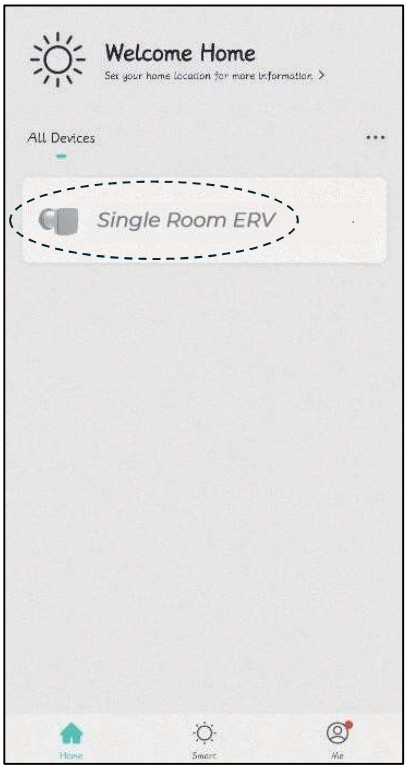

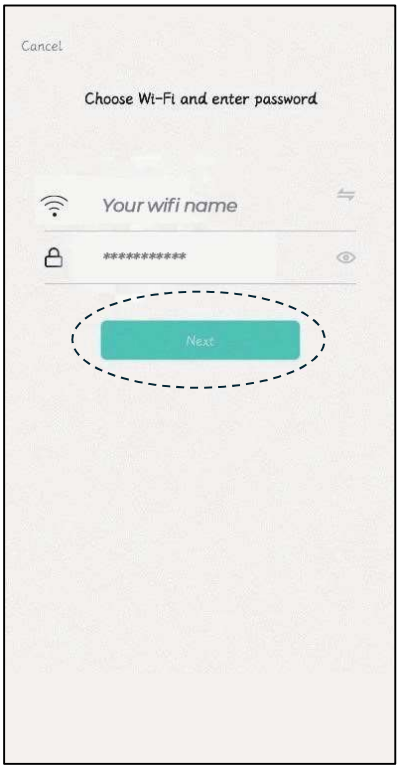

3. Open the downloaded app, go to the operation page, click the Add Device box, and search for devices.

4. At this point, the app receives the signal from the device; click to add the device for network connection.

5. Click Add Device to search for the home router's Wi-Fi signal and ensure that the Wi-Fi network name shown in the app matches the phone's current Wi-Fi connection, then enter the Wi-Fi password.

6. Once the Wi-Fi connection is completed, the device will connect to the network. When the connection process is finished, you can access the operation page to begin using the device.

➢ WI-FI NETWORK RESET AND DELETION

Remove the device from the app by proceeding as follows:

Return to the connection page used for app operation, press and hold the name of the device to be disconnected, and the option to remove the device will appear at the bottom.

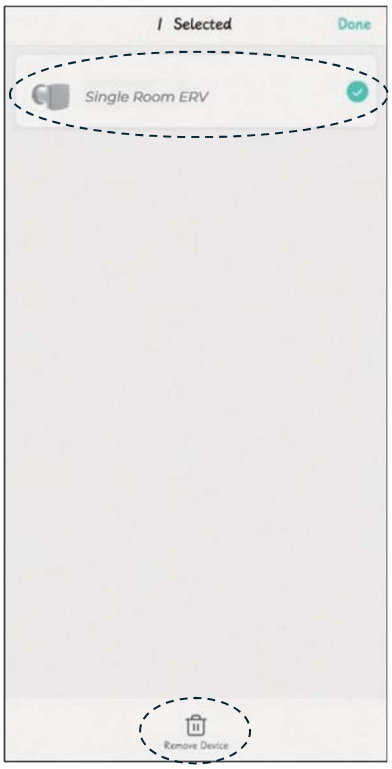

Click the Remove Device option and confirm to properly disconnect the device from the Wi-Fi network.

➢ WI-FI NETWORK RESET AND DELETION

Press and hold the Reset button for 15 seconds. LED1 (red), LED2 (green), and LED3 (blue) will flash cyclically three times and then turn off, and the device will restore the factory settings.

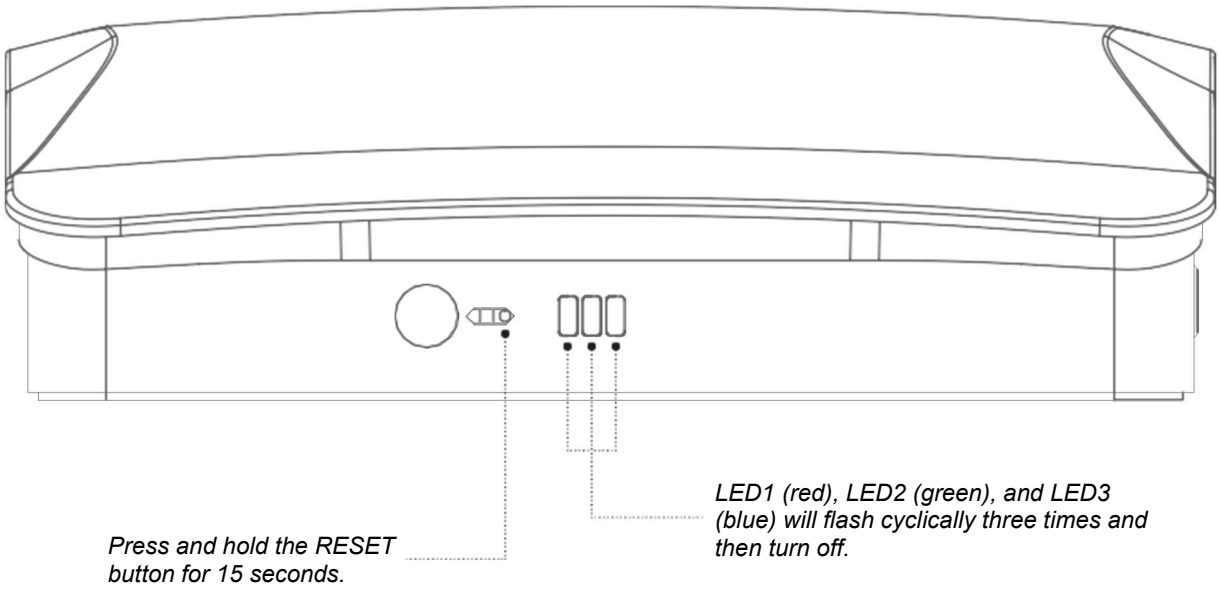

❖ The unit is equipped with a Wi-Fi function, and the user can set the humidity limit through the app. For details, refer to the description of the humidity control function in the section IoT Network Configuration and App Interface.

➢ MAINTENANCE AND CLEANING

1. Remove the front panel from the indoor unit. Disconnect the cables between the indoor unit and the inner duct, then detach the inner duct.
2. Remove the ceramic heat exchanger and the primary filter from the inner air duct.
3. The ceramic heat exchanger must be cleaned at least four times a year.

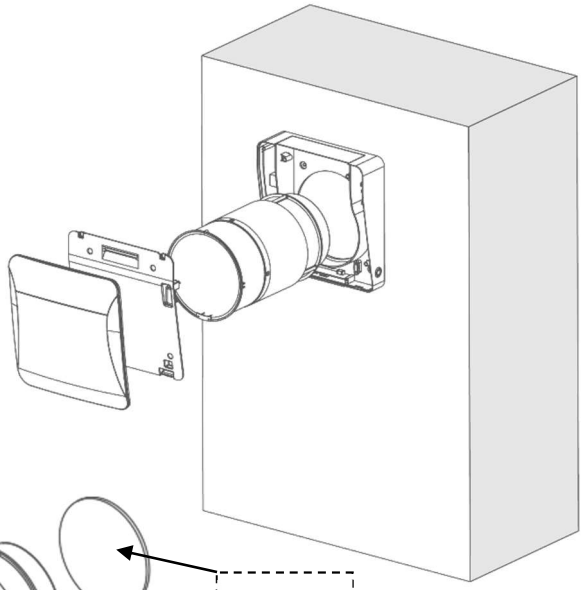

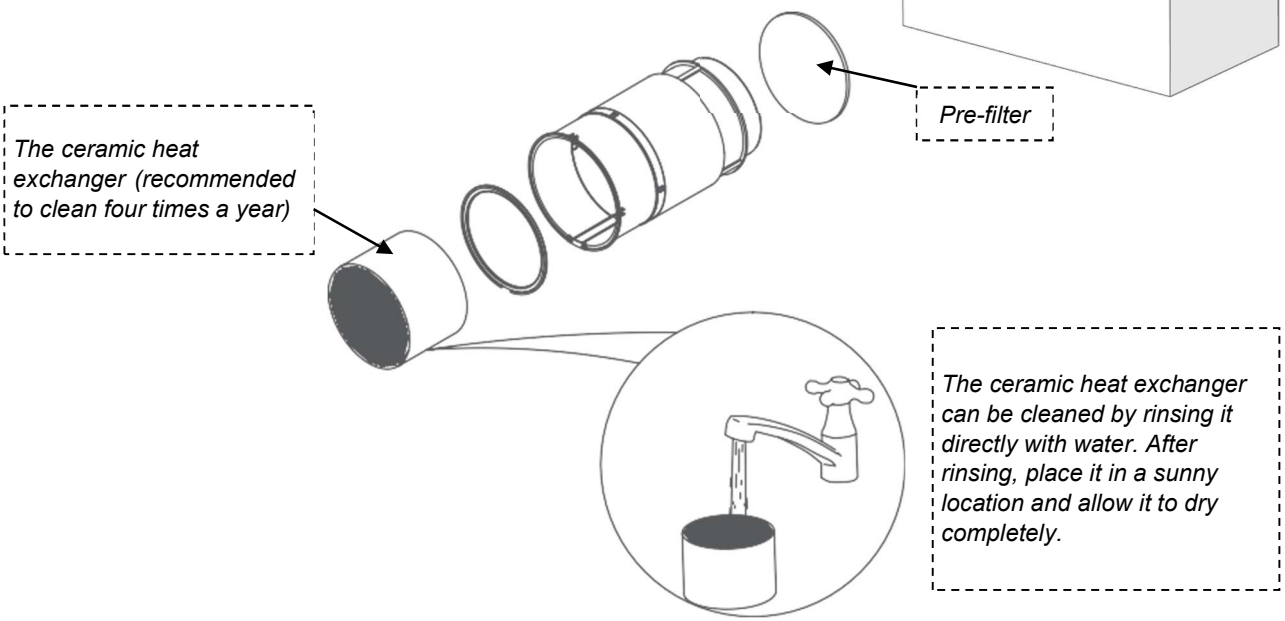

Clean the pre-filter at least four times a year. The user may wash or vacuum the pre-filter. After washing the pre-filter, make sure it is completely dry before reinstalling it in the air duct. The service life of the pre-filter is approximately three years. Contact the distributor to purchase replacement filters.

The F7 filter is optional. If the unit is equipped with an F7 filter, it must be cleaned at least four times a year. The F7 filter is not washable and must be vacuumed or replaced when dirty. Contact the seller to purchase replacement filters.

Clean the pre-filter at least four times a year. The user may wash or vacuum the pre-filter. After washing the pre-filter, make sure it is completely dry before reinstalling it in the air duct. The service life of the pre-filter is approximately three years. Contact the distributor to purchase replacement filters.

➢ Fan maintenance (once a year)

Remove the fixed bracket in the inner duct and take out the fan. Clean the impeller blades. Use a soft brush, cloth, or vacuum cleaner to clean the impeller. Do not use water-based abrasive cleaners, solvents, or sharp objects. The impeller blades must be cleaned once a year.

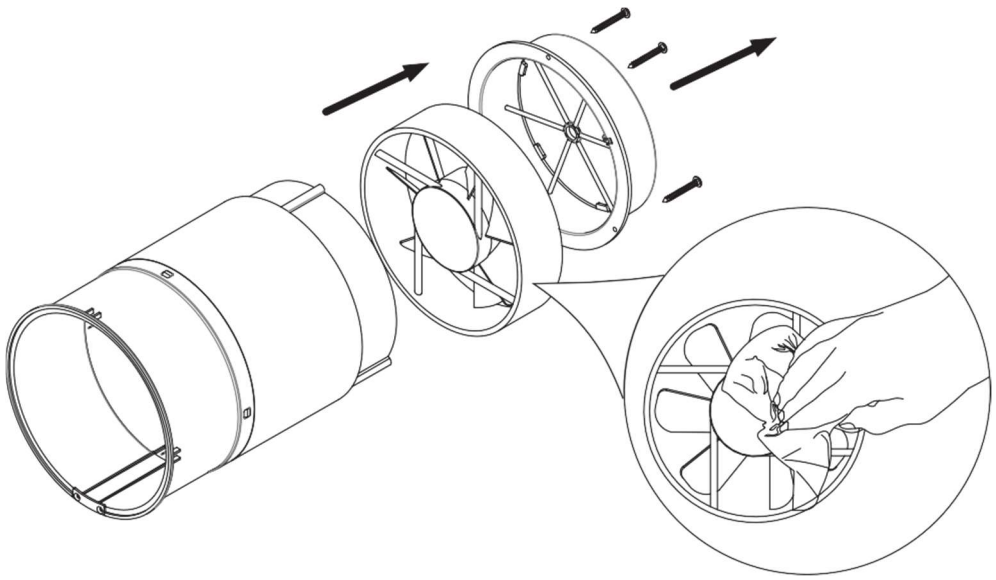

➢ STORAGE AND TRANSPORT RULES

Store the unit in the manufacturer's original packaging and in a dry location. The storage environment must be free from aggressive vapors and chemical mixtures that may cause corrosion, insulation damage, or seal deformation. Use lifting equipment for handling and storage operations to prevent damage to the unit caused by drops or excessive vibrations. Comply with the applicable handling requirements for the selected transport method. Transportation by any type of vehicle is permitted, provided that the unit is protected from mechanical and weather-related damage.

➢ TROUBLESHOOTING

Anomalia	Possibili cause	Risoluzione dei problemi
The fan does not start.	Power supply failure.	Ensure that the unit is properly connected to the power supply and make any necessary corrections if required.
	The motor is blocked or the impellers are obstructed.	Turn off the fan. Resolve any motor jamming or impeller blockage issues. Clean the blades. Restart the fan.
Insufficient airflow.	Low fan-speed setting.	Set a higher speed.
	The filter, the fan, or the heat exchanger is dirty.	Clean or replace the filter, and clean the fan and the heat exchanger. For heat exchanger and filter maintenance, refer to page 14.
Noise, vibrations.	The impeller is dirty.	Clean the impeller.
	Loose fastening screw on the fan housing or the ventilation hood.	Tighten the fan or external hood screws.
Wi-Fi connection failed.	The mobile phone is connected to the 5G Wi-Fi network.	Switch to the 2.4G network to connect.
	Incorrect connection to a public Wi-Fi network (e.g., Wi-Fi in shopping malls, hotels, etc., which requires user registration to gain access).	Properly configure the Wi-Fi router.
	The router has not yet been configured with an account and password.	
	The router is set to a higher security level.	
	The maximum number of devices that can be connected to the router has been exceeded.	
	Bluetooth on the mobile phone is turned off.	Enable Bluetooth on the mobile phone to improve the chances of a successful network connection.