The range includes 4 different sizes for airflows between 500 and 8000 m³/h:

- UTBS-2: airflow from 500 to 1.780 m³/h and 360 mm height.
- UTBS-3: airflow from 1.200 to 3.250 m³/h and 410 mm height.
- UTBS-5: airflow from 2.400 to 4.600 m³/h and 410mm height.
- UTBS-8: airflow from 4.000 to 7.500 m³/h and 500 mm height.

Main module composed of 3 sections: filtration, batteries and fan.

Filters
Filtration section with two alternatives:
- Long version P F7 with capacity for mounting two filters: F7 with very low built-in pressure drop and possibility of mounting a second filter inside the unit (supplied as accessory).
- M5 short version with capacity for a single M5 filter.

Batteries section with option to equip water coils, direct expansion coils or electric batteries.

Fan section, allows the air outlet to be oriented upwards or frontally, by exchanging the front and upper panels.

Motors
Three phase EC motors with integrated electronic protection, IP55, Class F.

Available in a version with perimeter base which facilitates the installation on roof. Also available raiin protection canopy delivered as accessory to be mounted on site.
Minimum ambient temperature: -10ºC.
Minimum air inlet temperature: -20ºC.

Components/Moduls:
– Sound attenuators
– Mixing box
– Filter box
– Coils modules

Other configurations available through the air handling units selection software.

In order to meet ErP requirements, Frequency converter must to be delivered with each UTBS. Try the suitable frequency converter according to selected motor power, and installation conditions (See table of accessories).

Robust construction
High quality finishing with aluminium profile structure, providing a robust and tight assembly.

Tightening system
In version P F7: The articulated arm, system guarantees the tightness of the filtration section.

Product selection software
S&P air handling units selection software available.

External terminal box
IP-55 side terminal box with fans terminals.
Units including electric battery include a separate terminal for the electric battery power supply (access by side panel).

Pressure tappings
In the filters and the fans to facilitate the connection of regulation or supervision accessories.

Presostato DPS-2-30
Includes one pressure switch to control the filter dirt condition.

CONSTRUCTIVE ADVANTAGES

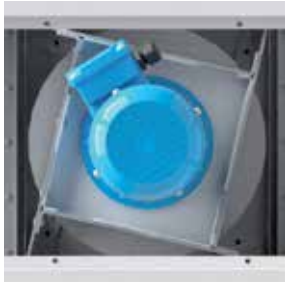

Fans
Plug-fan with backward blades impeller and AC IE-3 motor 400V/III/50Hz. IP-55 Class F.

Condensate tray
Versions with cold water coil and direct expansion coil in stainless steel with lateral outlet.

Easy access to filters through panels, side or bottom.
Two filtering options:
- Long version **P F7** with capacity for mounting two filters: F7 with very low built-in pressure drop and possibility of mounting a second filter (supplied as an accessory). The filter clamping system with articulated arms ensures excellent sealing of the filter assembly.

- **M5** short version with capacity to allow a single M5 filter mounted over a rail without filter clamping devices.

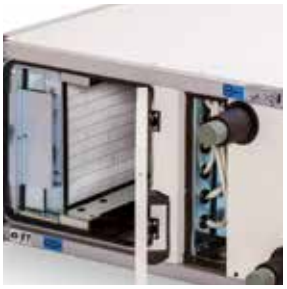

Heating and cooling coils
Possibility of incorporating water and electric coils and direct expansion coils.

ELECTRICAL CHARACTERISTICS

Units with electrical battery

	Complete unit		Fans				Electrical batteries		
	Rectangular air connections (mm)	Nominal air flow rate (m³/h)	Quantity	Power (kW)	Maximum absorbed current. Total fans (A)	Electrical supply	Heating power (kW)	Maximum absorbed current (A)	Voltage
UTBS-2 0,55kW	690 x 300	1.780	1	0,55	1,3	3/400V, 50Hz	4,5	6,9	3/400V, 50Hz
							15	23	
UTBS-3 0,55kW	1040 x 350	3.250	1	0,55	1,3	3/400V, 50Hz	6	9,2	3/400V, 50Hz
							15	23	
							24	36,5	
UTBS-3 1,1kW	1040 x 350	3.250	1	1,1	2,3	3/400V, 50Hz	6	9,2	3/400V, 50Hz
							15	23	
							24	36,5	
UTBS-5 1,1kW	1440 x 350	4.600	2	0,55	2,5	3/400V, 50Hz	9	13,7	3/400V, 50Hz
							15	23	
							36	54,7	
UTBS-5 2,2kW	1440 x 350	4.600	2	1,1	4,7	3/400V, 50Hz	9	13,7	3/400V, 50Hz
							15	23	
							36	54,7	
UTBS-8 1,5kW	1840 x 440	7.500	2	0,75	3,2	3/400V, 50Hz	15	23	3/400V, 50Hz
							24	36,5	
							45	68,5	
UTBS-8 3kW	1840 x 440	7.500	2	1,5	6,3	3/400V, 50Hz	15	23	3/400V, 50Hz
							24	36,5	
							45	68,5	

Units with hot water coil

	Complete unit		Fans			
	Rectangular air connections (mm)	Nominal air flow rate (m³/h)	Quantity	Power (kW)	Maximum absorbed current. Total fans (A)	Electrical supply
UTBS-2 0,55kW	690 x 300	1.780	1	0,55	1,3	3/400V, 50Hz
UTBS-3 0,55kW	1040 x 350	3.250	1	0,55	1,3	3/400V, 50Hz
UTBS-3 1,1kW			1	1,1	2,3	3/400V, 50Hz
UTBS-5 1,1kW	1440 x 350	4.600	2	0,55	2,5	3/400V, 50Hz
UTBS-5 2,2kW			2	1,1	4,7	3/400V, 50Hz
UTBS-8 1,5kW	1840 x 440	7.500	2	0,75	3,2	3/400V, 50Hz
UTBS-8 3kW			2	1,5	6,3	3/400V, 50Hz

Units with cold water coil

	Complete unit		Fans			
	Rectangular air connections (mm)	Nominal air flow rate (m³/h)	Quantity	Power (kW)	Maximum absorbed current. Total fans (A)	Electrical supply
UTBS-2 0,55kW	690 x 300	1.300	1	0,55	1,3	3/400V, 50Hz
UTBS-3 0,55kW	1040 x 350	2.600	1	0,55	1,3	3/400V, 50Hz
UTBS-3 1,1kW			1	1,1	2,3	3/400V, 50Hz
UTBS-5 1,1kW	1440 x 350	3.750	2	0,55	2,5	3/400V, 50Hz
UTBS-5 2,2kW			2	1,1	4,7	3/400V, 50Hz
UTBS-8 1,5kW	1840 x 440	6.100	2	0,75	3,2	3/400V, 50Hz
UTBS-8 3kW			2	1,5	6,3	3/400V, 50Hz

TECHNICAL CHARACTERISTICS

Fan section

The UBTS-2 and UTBS-3 models incorporate a fan, while the UTBS-5 and UTBS-8 models incorporate two fans. Each model has associated a certain size of fan combined with one or two available motors (depending on the model). By means of a frequency converted delivered as accessory, it is possible to adapt the working point to the requeriments of each installation, obtaining a high efficiency at the required working point.

Model	Maximum air			Fans					
	Cold water coil/DX	Hot water coil	Electric battery	Quantity	Fan power (kW)	Maximum intensity (A)*	Voltage	Maximum fan speed	
								Hz	RPM
UTBS-2 0,55kW	1300	1.780	1.780	1	0,55	1,3	3/400V, 50Hz	58	3240
UTBS-3 0,55kW	2600	3.250	3.250	1	0,55	1,3	3/400V, 50Hz	51	2860
UTBS-3 1,1kW				1	1,1	2,3	3/400V, 50Hz	61	3415
UTBS-5 1,1kW	3750	4.600	4.600	2	0,55	2,5	3/400V, 50Hz	51	2860
UTBS-5 2,2kW				2	1,1	4,7	3/400V, 50Hz	61	3375
UTBS-8 1,5kW	6100	7.500	7.500	2	0,75	3,2	3/400V, 50Hz	46	2580
UTBS-8 3kW				2	1,5	6,3	3/400V, 50Hz	54	3090

* In units with two fans, the total value corresponds to the sum of both fans.

Coil section

Water coils

The section can be formed by a cold or heat coil or by two coils, one of cold and the other of heat. The units can be supplied with 2 or 4 row heaters and 4 or 6 row cooling coils. If a cooling coil is installed, the section has a tray for collecting condensate made of AISI 304 stainless steel and a droplet separator to avoid dragging the droplep drag. Both the outlet of the connections and the condensate drain can be carried out on the right or left side of the unit.

Model	Air flow (m^3/h)	Coils thermal power (kW)						Inlet/Outlet connections
		Hot water coil				Cold water coil		
		H2		H4		C4	C6	
		80ºC/60ºC	50ºC/45ºC	80ºC/60ºC	50ºC/45ºC	7ºC/12ºC	7ºC/12ºC	
UTBS-2	900	11,9	8,3	18,2	12,4	8,1	9,6	1-1/4" GM
	1.200	14,4	10,0	22,7	15,5	10,0	11,9	
UTBS-3	1.700	23,5	16,0	34,7	23,5	15,5	20,0	1-1/4" GM
	2.500	30,5	20,9	46,8	31,9	20,5	23,3	
UTBS-5	2.500	33,9	23,3	51,2	34,7	23,2	29,2	1-1/4" GM
	3.500	42,7	29,4	66,6	45,2	29,6	38,4	
UTBS-8	4.000	55,0	37,7	81,4	55,4	36,0	46,8	1-1/2" GM
	6.000	72,5	49,8	111,5	76,1	48,2	64,8	

*Air inlet temperature: -5ºC, Rel. Hum: 80%
**Air inlet temperature: 32ºC, Rel. Hum: 50%.

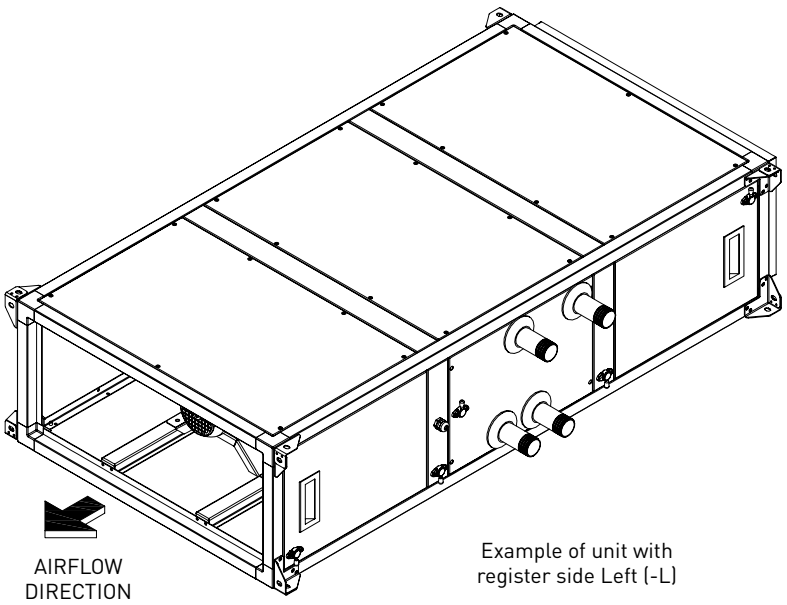

Example of unit with register side Left (-L)

Electric batteries

The unit can be supplied with electric batteries made of shielded resistances with a galvanised sheet frame. The heaters are equipped with safety protection with manual and automatic reset. The battery includes an anti-radiation screen to protect the filters.

Model	Available electric power / Stages					
UTBS-2	E4,5	4,5 kW/ 1et.	E15	15,0 kW/ 2et.		
UTBS-3	E6	6,0 kW/ 1et.	E15	15,0 kW/ 2et.	E24	24,0 kW/ 2et.
UTBS-5	E9	9,0 kW/ 2et.	E15	15,0 kW/ 2et.	E36	36,0 kW/ 3et.
UTBS-8	E15	15,0 kW/ 2et.	E24	24,0 kW/ 2et.	E45	45,0 kW/ 3et.

Direct expansion coil (DX)

The unit can be supplied with direct expansion coils for R-410A refrigerant. Compatible with the main DX-Control kits of the market.

4 rows coil

For applications with 100% recirculated air.

						COOLING					HEATING				
Model	Air flow (m³/h)	Coil internal volume (dm³)	Nº Stages	Ø Distributor (Liquid line)	Ø Colector (Gas Line)	Power* (kW)	Supply air Temp (ºC)	Rel. Hum. (%)	R410A Airflow (kg/h)	ΔP R410A (kPa)	Power** (kW)	Supply air Temp (ºC)	Rel. Hum. (%)	R410A Airflow (kg/h)	ΔP R410A (kPa)
UTBS-2	1.250	1,2	1	3/8"	5/8"	4,6	14,2	87	84,6	14,9	4,9	32,7	25	87,9	9,6
UTBS-3	2.500	2,21	1	1/2"	5/8"	8,8	14,4	87	163,3	13,0	8,0	33,6	28	143,4	6,1
UTBS-5	3.500	2,41	1	1/2"	5/8"	10,9	15,2	85	200,0	10,9	10,0	32,7	30	180,2	5,1
UTBS-8	6.000	4,4	1	1/2"	5/8"	19,9	14,9	86	368,3	22,1	17,2	32,7	30	310,1	8,8

*Air Inlet 24ºC / 50%R.H. R-410a refrigerant. Evaporation temperature: 7ºC

**Air Inlet 21ºC / 50%R.H. R-410a refrigerant. Condensation temperature: 39ºC

6 rows coil

For applications with 50% outdoor air/ 50% recirculated air

						COOLING					HEATING				
Model	Air flow (m³/h)	Coil internal volume (dm³)	Nº Stages	Ø Distributor (Liquid line)	Ø Colector (Gas Line)	Power* (kW)	Supply air Temp (ºC)	Rel. Hum. (%)	R410A Airflow (kg/h)	ΔP R410A (kPa)	Power** (kW)	Supply air Temp (ºC)	Rel. Hum. (%)	R410A Airflow (kg/h)	ΔP R410A (kPa)
UTBS-2	1.250	2	1	1/2"	5/8"	10,0	14,5	94	185,3	8,6	10,5	34,4	17	190,5	5,1
UTBS-3	2.500	3,31	1	1/2"	5/8"	19,4	14,9	94	358,6	25,3	19,9	30,8	18	359,0	13,7
UTBS-5	3.500	4,3	1	1/2"	3/4"	26,6	15,2	94	490,5	18,6	27,6	30,6	18	498,0	10,3
UTBS-8	6.000	8,4	2	2 x 1/2"	2x 3/4"	47,8	14,6	94	882,0	25,3	49,8	31,8	17	897,0	12,3

*Air Inlet 29ºC / 55%R.H. R-410a refrigerant. Evaporation temperature: 7ºC

**Air Inlet 8ºC / 75%R.H. R-410a refrigerant. Condensation temperature: 39ºC

Filtering section

Filtration section with two alternatives:

- Long version **P F7** with capacity for mounting two filters: F7 with very low built-in pressure drop and possibility of mounting a second filter inside the unit (supplied as accessory). The filter clamping system with articulated arms ensures excellent sealing of the filter assembly. Available filters G4, M5 and F9.

- **M5** short version with capacity capacity to allow a single M5 filter mounted over a rail.

Filtration efficiency according to ISO-16890 up to ePM10 = 99.5%, ePM2.5 = 98.5%, ePM1 = 96.2%. Corresponding to units equipped with F7+F9 filters.

Filter combination	Filtration efficiency s/ISO-16890*		
	ePM10	ePM2,5	ePM1
M5	55%	-	-
F7	90%	83%	75%
M5+F7	95,5%	83%	75%
M5+F9	97,7%	91%	85%
F7+F9	99,5%	98,5%	96,2%

* Considering filters at mid-life of its service life.

STANDARD CONFIGURATION

P F7 VERSIONS WITH THE POSSIBILITY OF MOUNTING TWO FILTERS (LONG CHASSIS)

Fan

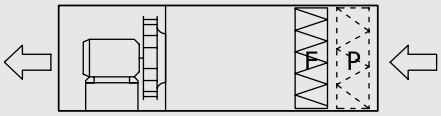

P: Prefilter G4/M5 (accessory)
F: Filter F7

Fan+Heating

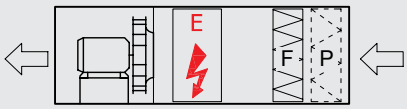

P: Prefilter G4/M5 (accessory)
F: Filter F7
E: Electric battery (E4,5 to E45)

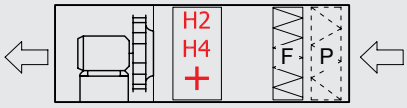

P: Prefilter G4/M5 (accessory)
F: Filter F7
H2: 2 Rows hot water coil
H4: 4 Rows hot water coil

Fan+Cooling

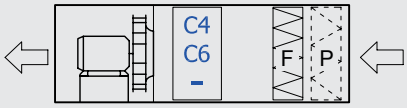

P: Prefilter G4/M5 (accessory)
F: Filter F7
C4: 4 Rows cool water coil
C6: 6 Rows cool water coil

P: Prefilter G4/M5 (accessory)
F: Filter F7
X4: 4 Rows direct expansion coil
X6: 6 Rows direct expansion coil

Fan+Heating+Cooling

P: Prefilter G4/M5 (accessory)
F: Filter F7
H2: 2 Rows hot water coil
C4: 4 Rows cool water coil
C6: 6 Rows cool water coil

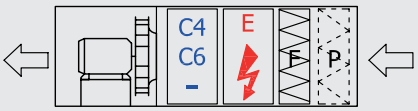

P: Prefilter G4/M5 (accessory)
F: Filter F7
E: Electric battery (E4,5 to E45)
C4: 4 Rows cool water coil
C6: 6 Rows cool water coil

All the versions are available with connections side on the left or right side (according to air flow sense).

M5 VERSIONS WITH A SINGLE FILTER (SHORT CHASSIS)

Fan

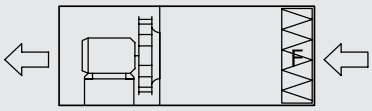

F: Filter M5

Fan+Heating

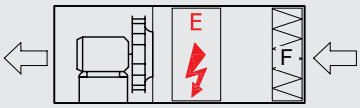

F: Filter M5
E: Electric coil (E4.5 to E45)

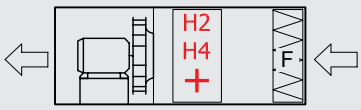

F: Filter M5
H2: Hot water coil 2 rows
H4: Hot water coil 4 rows

Fan+Cooling

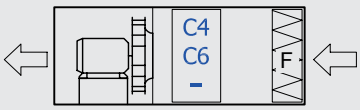

F: Filter M5
C4: cold water coil 4 rows
C6: cold water coil 6 rows

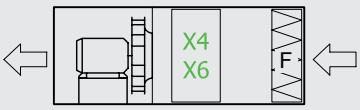

F: Filter M5
X4: Direct expansion coil DX 4 rows
X6: DX direct expansion coil 6 rows

Fan+Heating+Cooling

F: Filter M5
H2: Hot water coil 2 rows
C4: cold water coil 4 rows
C6: cold water coil 6 rows

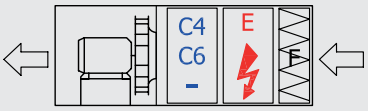

F: Filter M5
E: Electric coil (E4.5 to E45)
C4: Cold water coil 4 rows
C6: Cold water coil 6 rows

All the versions are available with connections side on the left or right side (according to air flow sense).

ACOUSTIC CHARACTERISTICS - UTBS 2

Airflow (m³/h)	Total Pressure (m³/h)	Sound power levels at INLET (Lw(A))*									
		Frequency (Hz)								Total Sound Power Lw(A) dB(A)	Total Sound Pressure at 3m. dB(A)
		63	125	250	500	1000	2000	4000	8000		
500	200	77	74	72	62	55	47	45	42	66	45
	350	81	78	76	66	58	51	48	46	70	49
1.000	200	77	74	71	62	54	47	44	41	66	45
	400	83	80	77	67	60	53	50	47	71	50
	600	86	83	81	71	64	56	54	51	75	54
1.500	200	80	77	75	65	58	50	48	45	69	48
	400	83	80	78	68	60	53	50	48	72	51
	500	85	81	79	69	62	55	52	49	73	52

Airflow (m³/h)	Total Pressure (m³/h)	Sound power levels at OUTLET (Lw(A))*									
		Frequency (Hz)								Total Sound Power Lw(A) dB(A)	Total Sound Pressure at 3m. dB(A)
		63	125	250	500	1000	2000	4000	8000		
500	200	68	70	71	68	67	66	62	61	73	52
	350	72	74	75	72	70	70	65	65	76	55
1.000	200	68	70	70	68	66	66	61	60	72	51
	400	74	76	76	73	72	72	67	66	78	57
	600	77	79	80	77	76	75	71	70	81	60
1.500	200	71	73	74	71	70	69	65	64	76	55
	400	74	76	77	74	72	72	67	67	78	57
	500	76	77	78	75	74	74	69	68	80	59

Airflow (m³/h)	Total Pressure (m³/h)	Sound power levels at RADIATED (Lw(A))*									
		Frequency (Hz)								Total Sound Power Lw(A) dB(A)	Total Sound Pressure at 3m. dB(A)
		63	125	250	500	1000	2000	4000	8000		
500	200	64	58	58	47	50	49	44	42	56	35
	350	68	62	62	51	54	52	48	46	59	38
1.000	200	64	58	58	47	49	48	43	42	55	34
	400	70	64	63	52	55	54	49	47	61	40
	600	73	67	67	56	59	57	53	51	64	43
1.500	200	67	61	61	50	53	51	47	45	59	38
	400	70	64	64	53	56	54	50	48	61	40
	500	72	66	65	54	57	56	51	49	63	42

*Sound pressure level, free field mesured.

THERMAL CHARACTERISTICS - UTBS 2

2-row heating coil									
Airflow		900 (m³/h)				1200 (m³/h)			
Water T. (ºC)	Ext. T. (ºC)	Power (kW)	Output T. (ºC)	Water flow (l/s)	Water pressure drop (kPa)	Power (kW)	Output T. (ºC)	Water flow (l/s)	Water pressure drop (kPa)
80/60	-10	12,6	32,1	0,15	3,4	15,3	28,4	0,18	4,8
	-5	11,9	34,7	0,14	3,0	14,4	31,1	0,17	4,3
	0	11,1	37,1	0,13	2,7	13,5	33,8	0,16	3,8
	5	10,3	39,5	0,12	2,3	12,5	36,4	0,15	3,4
	10	9,6	41,8	0,11	2,0	11,6	39,0	0,14	2,9
50/45	-10	9,0	19,9	0,43	25,0	10,9	17,2	0,52	36,0
	-5	8,3	22,5	0,40	21,5	10,0	20,1	0,48	30,8
	0	7,5	25,0	0,36	18,0	9,1	22,8	0,43	25,9
	5	6,8	27,5	0,32	14,8	8,2	25,5	0,39	21,2
	10	6,0	29,9	0,29	11,8	7,7	28,1	0,34	17,0

4-row heating coil									
Airflow		900 (m³/h)				1200 (m³/h)			
Water T. (ºC)	Ext. T. (ºC)	Power (kW)	Output T. (ºC)	Water flow (l/s)	Water pressure drop (kPa)	Power (kW)	Output T. (ºC)	Water flow (l/s)	Water pressure drop (kPa)
80/60	-10	19,3	54,3	0,23	4,6	24,1	50,3	0,29	6,9
	-5	18,2	55,6	0,22	4,1	22,7	51,9	0,27	6,2
	0	17,0	56,8	0,20	3,6	21,3	53,3	0,25	5,5
	5	15,9	57,9	0,19	3,2	19,9	54,6	0,24	4,8
	10	14,7	59,0	0,18	2,8	18,3	55,9	0,22	4,2
50/45	-10	13,5	34,8	0,64	32,8	16,8	32,1	0,80	49,6
	-5	12,4	36,2	0,59	28,0	15,5	33,7	0,75	42,5
	0	11,2	37,4	0,54	23,5	14,1	35,2	0,66	35,7
	5	10,1	38,7	0,48	19,4	12,6	36,6	0,61	29,7
	10	8,9	39,8	0,43	15,5	11,2	38,1	0,52	23,5

4-row cooling coil									
Airflow		900 (m³/h)				1200 (m³/h)			
Water T. (ºC)	Ext. T. (ºC)	Power (kW)	Output Temp/ Rel. Hum (ºC / %)	Water flow (l/s)	Water pressure drop (kPa)	Power (kW)	Output Temp/ Rel. Hum (ºC / %)	Water flow (l/s)	Water pressure drop (kPa)
7/12	25 / 50%	3,4	15,4 / 84,7%	0,16	2,5	4,2	15,9 / 82,2%	0,20	3,9
	27 / 50%	4,6	15,6 / 86%	0,22	4,6	5,7	16,3 / 83,3%	0,27	7,1
	32 / 50%	8,1	16,5/ 87,7%	0,39	14,3	10,0	17,5 / 85,0%	0,48	21,7

6-row cooling coil									
Airflow		900 (m³/h)				1200 (m³/h)			
Water T. (ºC)	Ext. T. (ºC)	Power (kW)	Output Temp/ Rel. Hum (ºC / %)	Water flow (l/s)	Water pressure drop (kPa)	Power (kW)	Output Temp/ Rel. Hum (ºC / %)	Water flow (l/s)	Water pressure drop (kPa)
7/12	25 / 50%	3,7	14,2 / 91,3%	0,18	1,2	4,8	14,5 / 89,4%	0,23	1,8
	27 / 50%	5,2	14,1 / 93,2%	0,25	2,1	6,7	14,5 / 91,1%	0,32	3,4
	32 / 50%	9,6	13,8 / 94,8%	0,46	7,1	11,9	14,8 / 92,7%	0,57	11,0

ACOUSTIC CHARACTERISTICS - UTBS 3

Airflow (m³/h)	Total Pressure (m³/h)	Sound power levels at INLET (Lw(A))*									
		Frequency (Hz)								Total Sound Power Lw(A) dB(A)	Total Sound Pressure at 3m. dB(A)
		63	125	250	500	1000	2000	4000	8000		
2.000	400	83	80	78	68	60	53	50	48	72	51
	600	86	83	80	70	63	56	53	50	74	53
	800	88	85	82	73	65	58	55	52	77	56
3.000	200	88	85	83	73	66	59	56	53	77	56
	400	89	86	83	73	66	59	56	53	77	56
	600	90	86	84	74	67	60	57	54	78	57

Airflow (m³/h)	Total Pressure (m³/h)	Sound power levels at OUTLET (Lw(A))*									
		Frequency (Hz)								Total Sound Power Lw(A) dB(A)	Total Sound Pressure at 3m. dB(A)
		63	125	250	500	1000	2000	4000	8000		
2.000	400	74	76	77	74	72	72	67	67	78	57
	600	77	79	79	76	75	75	70	69	81	60
	800	79	81	81	79	77	77	72	71	83	62
3.000	200	79	81	82	79	78	78	73	72	84	63
	400	80	82	82	79	78	78	73	72	84	63
	600	81	82	83	80	79	79	74	73	85	64

Airflow (m³/h)	Total Pressure (m³/h)	Sound power levels at RADIATED (Lw(A))*									
		Frequency (Hz)								Total Sound Power Lw(A) dB(A)	Total Sound Pressure at 3m. dB(A)
		63	125	250	500	1000	2000	4000	8000		
2.000	400	70	64	64	53	56	54	50	48	61	40
	600	73	67	66	55	58	57	52	50	64	43
	800	75	69	69	58	60	59	54	53	66	45
3.000	200	76	69	69	58	61	60	55	53	67	46
	400	76	70	69	58	61	60	55	53	67	46
	600	77	71	70	59	62	61	56	54	68	47

*Sound pressure level, free field mesured.

THERMAL CHARACTERISTICS - UTBS 3

2-row heating coil									
Airflow		1700 (m³/h)				2500 (m³/h)			
Water T. (ºC)	Ext. T. (ºC)	Power (kW)	Output T. (ºC)	Water flow (l/s)	Water pressure drop (kPa)	Power (kW)	Output T. (ºC)	Water flow (l/s)	Water pressure drop (kPa)
80/60	-10	27,9	33,9	0,30	6,7	32,4	28,8	0,39	10,9
	-5	23,5	36,4	0,28	6,1	30,5	31,6	0,36	9,8
	0	22,0	38,8	0,26	5,4	28,6	34,3	0,34	8,7
	5	20,5	41,1	0,25	4,7	26,6	36,9	0,32	7,6
	10	18,9	43,4	0,23	4,1	24,6	39,5	0,29	6,6
50/45	-10	17,4	20,8	0,83	48,2	22,7	17,2	1,08	78,2
	-5	16,0	23,3	0,77	41,5	20,9	20,0	1,00	67,2
	0	14,6	25,8	0,70	35,0	19,0	22,8	0,91	56,7
	5	13,2	28,2	0,63	28,9	17,2	25,5	0,82	46,8
	10	11,7	30,6	0,56	23,2	15,2	28,2	0,72	37,6

4-row heating coil									
Airflow		1700 (m³/h)				2500 (m³/h)			
Water T. (ºC)	Ext. T. (ºC)	Power (kW)	Output T. (ºC)	Water flow (l/s)	Water pressure drop (kPa)	Power (kW)	Output T. (ºC)	Water flow (l/s)	Water pressure drop (kPa)
80/60	-10	36,8	55,0	0,44	4,4	49,7	49,7	0,59	7,7
	-5	34,7	56,2	0,42	3,9	46,8	51,2	0,56	6,8
	0	32,5	57,4	0,39	3,5	43,8	52,6	0,52	6,1
	5	30,3	58,4	0,36	3,1	40,9	54,0	0,49	5,3
	10	28,0	59,5	0,34	2,7	37,8	55,3	0,45	4,6
50/45	-10	25,7	32,6	1,23	31,5	34,7	31,6	1,60	55,0
	-5	23,5	36,6	1,13	26,9	31,9	33,2	1,50	47,0
	0	21,4	37,8	1,02	22,6	29,0	34,8	1,39	39,5
	5	19,3	39,0	0,92	18,6	26,1	36,3	1,25	32,5
	10	17,1	40,1	0,82	14,9	23,1	37,7	1,10	26,0

4-row cooling coil									
Airflow		1700 (m³/h)				2500 (m³/h)			
Water T. (ºC)	Ext. T. (ºC)	Power (kW)	Output Temp/ Rel. Hum (ºC / %)	Water flow (l/s)	Water pressure drop (kPa)	Power (kW)	Output Temp/ Rel. Hum (ºC / %)	Water flow (l/s)	Water pressure drop (kPa)
7/12	25 / 50%	6,2	15,45/85%	0,3	2,2	8,6	16,1 / 81,7%	0,41	4,2
	27 / 50%	8,7	15,56/86,5%	0,42	4,3	11,6	16,5 / 82,8%	0,55	7,7
	32 / 50%	15,5	16,32/88,1%	0,74	13,6	20,5	17,7 / 84,4%	0,98	23,8

6-row cooling coil									
Airflow		1700 (m³/h)				2500 (m³/h)			
Water T. (ºC)	Ext. T. (ºC)	Power (kW)	Output Temp/ Rel. Hum (ºC / %)	Water flow (l/s)	Water pressure drop (kPa)	Power (kW)	Output Temp/ Rel. Hum (ºC / %)	Water flow (l/s)	Water pressure drop (kPa)
7/12	25 / 50%	9,6	12,13/93,5%	0,46	7,2	12,9	13,0 / 90,5%	0,62	13,1
	27 / 50%	12,3	12,18/94,1%	0,59	12,0	16,6	13,2 / 91,1%	0,79	21,7
	32 / 50%	20,0	12,38/95,5%	0,96	31,5	23,3	13,7 / 92,8%	1,31	57,4

ACOUSTIC CHARACTERISTICS - UTBS 5

Airflow (m³/h)	Total Pressure (m³/h)	Sound power levels at INLET (Lw(A))*									
		Frequency (Hz)								Total Sound Power Lw(A) dB(A)	Total Sound Pressure at 3m. dB(A)
		63	125	250	500	1000	2000	4000	8000		
2.000	400	89	86	84	74	67	59	57	54	78	57
	700	94	91	89	79	72	64	62	59	83	62
	1000	98	94	92	82	75	68	65	62	86	65
3.500	500	90	87	85	75	68	60	58	55	79	58
	700	93	90	88	78	71	63	61	58	82	61
	900	96	93	91	81	74	66	64	61	85	64
4.500	200	89	86	83	74	66	59	56	53	78	57
	400	91	88	85	75	68	61	58	55	79	58
	700	94	91	88	78	71	64	61	58	82	61

Airflow (m³/h)	Total Pressure (m³/h)	Sound power levels at OUTLET (Lw(A))*									
		Frequency (Hz)								Total Sound Power Lw(A) dB(A)	Total Sound Pressure at 3m. dB(A)
		63	125	250	500	1000	2000	4000	8000		
2.000	400	80	82	83	80	79	78	74	73	85	64
	700	85	87	88	85	84	83	79	78	90	69
	1000	89	90	91	88	87	87	82	81	93	72
3.500	500	81	83	84	81	80	79	75	74	86	65
	700	84	86	87	84	83	82	78	77	88	67
	900	87	89	90	87	86	85	81	80	92	71
4.500	200	80	82	82	80	78	78	73	72	84	63
	400	82	84	84	81	80	80	75	74	86	65
	700	85	87	87	84	83	83	78	77	89	68

Airflow (m³/h)	Total Pressure (m³/h)	Sound power levels at RADIATED (Lw(A))*									
		Frequency (Hz)								Total Sound Power Lw(A) dB(A)	Total Sound Pressure at 3m. dB(A)
		63	125	250	500	1000	2000	4000	8000		
2.000	400	76	70	70	59	62	60	56	54	68	47
	700	81	75	75	64	67	66	61	59	73	52
	1000	85	79	78	67	70	69	64	62	76	55
3.500	500	77	71	71	60	63	62	57	55	69	48
	700	80	74	74	63	66	64	60	58	71	50
	900	83	77	77	66	69	68	63	61	75	54
4.500	200	76	70	70	59	61	60	55	54	67	46
	400	78	72	71	60	63	62	57	55	69	48
	700	81	75	74	63	66	65	60	58	72	51

*Sound pressure level, free field mesured.

THERMAL CHARACTERISTICS - UTBS 5

2-row heating coil									
Airflow		2500 (m³/h)				4500 (m³/h)			
Water T. (ºC)	Ext. T. (ºC)	Power (kW)	Output T. (ºC)	Water flow (l/s)	Water pressure drop (kPa)	Power (kW)	Output T. (ºC)	Water flow (l/s)	Water pressure drop (kPa)
80/60	-10	36	33,2	0,43	4,9	56,6	25,7	0,64	10,1
	-5	33,9	35,7	0,41	4,4	50,5	28,7	0,6	9,1
	0	31,8	38,1	0,38	3,9	47,3	31,5	0,57	8
	5	29,6	40,5	0,35	3,4	44	34,3	0,53	7,1
	10	27,3	42,8	0,33	2,9	40,6	37,1	0,49	6,1
50/45	-10	25,4	20,5	1,21	35,7	37,8	15,2	1,81	74,3
	-5	23,3	23	1,12	30,6	34,8	18,2	1,67	63,7
	0	21,3	25,5	1,02	25,7	31,7	21,1	1,52	53,6
	5	19,1	27,9	0,92	21,2	28,5	24,1	1,36	44,2
	10	16,9	30,3	0,81	17	25,3	26,8	1,21	35,3

4-row heating coil									
Airflow		2500 (m³/h)				4500 (m³/h)			
Water T. (ºC)	Ext. T. (ºC)	Power (kW)	Output T. (ºC)	Water flow (l/s)	Water pressure drop (kPa)	Power (kW)	Output T. (ºC)	Water flow (l/s)	Water pressure drop (kPa)
80/60	-10	54,3	55,2	0,65	6,1	85,6	47	1,02	14,2
	-5	51,2	56,4	0,61	5,5	80,6	48,7	0,96	12,7
	0	48	57,6	0,57	4,9	75,6	50,4	0,9	11,3
	5	44,7	58,7	0,54	4,3	70,4	51,9	0,84	9,9
	10	41,4	59,7	0,5	3,7	65,2	53,5	0,78	8,6
50/45	-10	37,7	35,3	1,8	43,7	59,6	29,7	2,85	102,4
	-5	34,7	36,6	1,66	37,4	54,8	31,5	2,62	87,5
	0	31,5	37,8	1,51	31,3	49,9	33,3	2,39	73,5
	5	28,3	39	1,36	25,8	44,9	39,4	2,15	60,4
	10	25,1	40,1	1,2	20,6	39,8	36,5	1,9	48,2

4-row cooling coil									
Airflow		2500 (m³/h)				4500 (m³/h)			
Water T. (ºC)	Ext. T. (ºC)	Power (kW)	Output Temp / Rel. Hum (ºC / %)	Water flow (l/s)	Water pressure drop (kPa)	Power (kW)	Output Temp / Rel. Hum (ºC / %)	Water flow (l/s)	Water pressure drop (kPa)
7/12	25 / 50%	9,7	15,1 / 853%	0,5	3,4	14,2	16 / 81,1%	0,68	7,4
	27 / 50%	13,5	15,2 / 86,4%	0,65	6,7	18,7	16,6 / 81,9%	0,9	12,8
	32 / 50%	23,2	16,1 / 88,1%	1,11	19,6	32,6	17,9 / 83,6%	1,56	38,8

6-row cooling coil									
Airflow		2500 (m³/h)				4500 (m³/h)			
Water T. (ºC)	Ext. T. (ºC)	Power (kW)	Output Temp / Rel. Hum (ºC / %)	Water flow (l/s)	Water pressure drop (kPa)	Power (kW)	Output Temp / Rel. Hum (ºC / %)	Water flow (l/s)	Water pressure drop (kPa)
7/12	25 / 50%	13,9	12,3 / 93,4%	0,66	7,2	21,7	13,6 / 88,6%	1,04	17,6
	27 / 50%	18	12,3 / 94%	0,86	12,1	28,1	13,9 / 89,3%	1,35	29,5
	32 / 50%	29,2	12,5 / 95,4%	1,4	31,9	46,8	14,5 / 91,1%	2,24	78,3

ACOUSTIC CHARACTERISTICS - UTBS 8

Airflow (m³/h)	Total Pressure (m³/h)	Sound power levels at INLET (Lw(A))*									
		Frequency (Hz)								Total Sound Power Lw(A) dB(A)	Total Sound Pressure at 3m. dB(A)
		63	125	250	500	1000	2000	4000	8000		
4.000	400	89	86	84	74	67	59	57	54	78	57
	700	95	92	89	79	72	65	62	59	84	63
	1000	98	95	93	83	76	69	66	63	87	66
6.000	400	92	89	87	77	70	62	60	57	81	60
	600	94	91	89	79	71	64	61	59	83	62
	800	96	93	90	81	73	66	63	60	85	64
7.500	200	95	92	90	80	73	65	63	60	84	63
	500	96	93	91	81	74	66	64	61	85	64

Airflow (m³/h)	Total Pressure (m³/h)	Sound power levels at OUTLET (Lw(A))*									
		Frequency (Hz)								Total Sound Power Lw(A) dB(A)	Total Sound Pressure at 3m. dB(A)
		63	125	250	500	1000	2000	4000	8000		
4.000	400	80	82	83	80	79	78	74	73	85	64
	700	86	88	88	85	84	84	79	78	90	69
	1000	89	91	92	89	88	88	83	82	94	73
6.000	400	83	85	86	83	82	81	77	76	88	67
	600	85	87	88	85	83	83	78	78	89	68
	800	87	89	89	87	85	85	80	79	91	70
7.500	200	86	88	89	86	85	84	80	79	91	70
	500	87	89	90	87	86	85	81	80	92	71

Airflow (m³/h)	Total Pressure (m³/h)	Sound power levels at RADIATED (Lw(A))*									
		Frequency (Hz)								Total Sound Power Lw(A) dB(A)	Total Sound Pressure at 3m. dB(A)
		63	125	250	500	1000	2000	4000	8000		
4.000	400	76	70	70	59	62	61	56	54	68	47
	700	82	76	75	64	67	66	61	59	73	52
	1000	86	79	79	68	71	70	65	63	77	56
6.000	400	79	73	73	62	65	64	59	57	71	50
	600	81	75	75	64	67	65	61	59	72	51
	800	83	77	77	66	68	67	62	61	74	53
7.500	200	82	76	76	65	68	67	62	60	74	53
	500	83	77	77	66	69	68	63	61	75	54

*Sound pressure level, free field mesured.

THERMAL CHARACTERISTICS - UTBS 8

2-row heating coil									
Airflow		4000 (m³/h)				6000 (m³/h)			
Water T. (ºC)	Ext. T. (ºC)	Power (kW)	Output T. (ºC)	Water flow (l/s)	Water pressure drop (kPa)	Power (kW)	Output T. (ºC)	Water flow (l/s)	Water pressure drop (kPa)
80/60	-10	58,4	33,8	0,70	5,9	77,0	28,5	0,92	9,8
	-5	55,0	36,3	0,66	5,3	72,5	31,2	0,87	8,8
	0	51,5	38,7	0,62	4,7	68,0	34,0	0,81	7,8
	5	48,0	41,0	0,57	4,1	63,3	36,6	0,75	6,8
	10	44,4	43,3	0,53	3,6	58,5	39,2	0,70	5,9
50/45	-10	41,0	20,7	1,96	42,7	54,1	17,0	2,60	70,8
	-5	37,7	23,3	1,80	36,6	49,8	19,9	2,38	60,9
	0	34,3	25,8	1,64	30,8	45,3	22,7	2,17	51,3
	5	30,9	28,2	1,48	25,4	40,8	25,4	1,95	42,3
	10	27,4	30,5	1,31	20,4	36,2	28,1	1,73	33,9

4-row heating coil									
Airflow		4000 (m³/h)				6000 (m³/h)			
Water T. (ºC)	Ext. T. (ºC)	Power (kW)	Output T. (ºC)	Water flow (l/s)	Water pressure drop (kPa)	Power (kW)	Output T. (ºC)	Water flow (l/s)	Water pressure drop (kPa)
80/60	-10	86,4	54,8	1,03	4,7	118,5	49,2	1,41	8,4
	-5	81,4	56,0	0,97	4,2	111,5	50,7	1,33	7,5
	0	76,2	57,2	0,91	3,7	104,5	52,2	1,25	6,7
	5	71,0	58,3	0,85	3,2	97,3	53,6	1,16	5,8
	10	65,7	59,3	0,79	2,8	89,0	55,0	1,07	5,0
50/45	-10	60,3	35,2	2,88	34,1	82,9	31,4	3,96	62,1
	-5	55,4	36,5	2,65	29,1	76,1	33,1	3,64	52,9
	0	50,3	37,8	2,41	24,3	69,3	34,6	3,31	44,3
	5	45,2	38,9	2,16	19,9	62,3	36,1	2,97	36,2
	10	40,1	40,0	1,92	15,9	55,1	37,5	2,63	28,8

4-row cooling coil									
Airflow		4000 (m³/h)				6000 (m³/h)			
Water T. (ºC)	Ext. T. (ºC)	Power (kW)	Output Temp/ Rel. Hum (ºC / %)	Water flow (l/s)	Water pressure drop (kPa)	Power (kW)	Output Temp/ Rel. Hum (ºC / %)	Water flow (l/s)	Water pressure drop (kPa)
7/12	25 / 50%	13,3	16 / 84%	0,6	1,9	19,5	16,3 / 81,2%	0,93	4,1
	27 / 50%	19,5	15,9 / 86,5%	0,93	4,0	27,2	16,7 / 82,7%	1,30	7,9
	32 / 50%	36,0	16,5 / 88,1%	1,72	13,8	48,2	17,9 / 84,2%	2,31	24,8

6-row cooling coil									
Airflow		4000 (m³/h)				6000 (m³/h)			
Water T. (ºC)	Ext. T. (ºC)	Power (kW)	Output Temp/ Rel. Hum (ºC / %)	Water flow (l/s)	Water pressure drop (kPa)	Power (kW)	Output Temp/ Rel. Hum (ºC / %)	Water flow (l/s)	Water pressure drop (kPa)
7/12	25 / 50%	22,0	12,3 / 93,4%	1,05	6,7	30,4	13,2 / 90,3%	1,45	12,7
	27 / 50%	28,7	12,3 / 84,1%	1,37	11,4	39,2	13,4 / 91,0%	1,87	21,2
	32 / 50%	46,8	12,5 / 95,5%	2,24	30,2	64,8	13,8 / 92,7%	3,10	57,2

DIMENSIONS (mm)

Short version: Single filter M5
Configuration without coils (For ventilation applications)

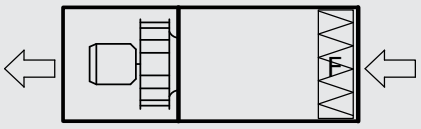

F: Filter M5

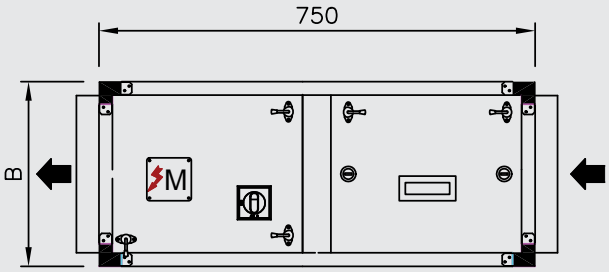

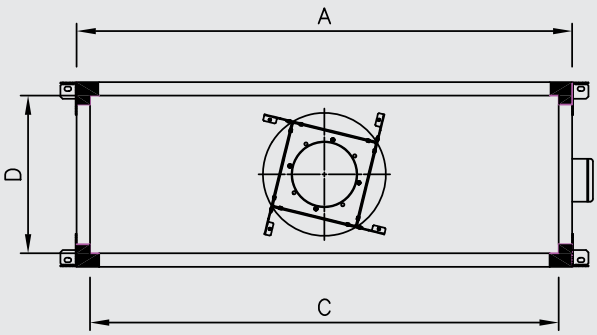

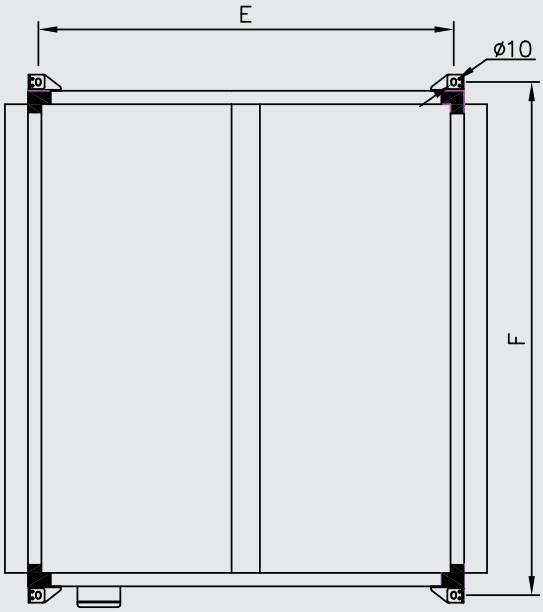

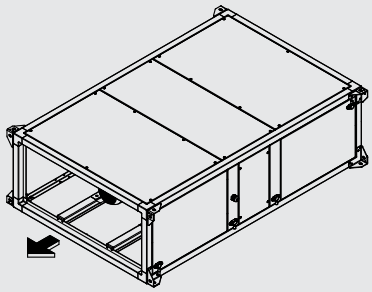

AIR DIRECTION

M FANS TERMINAL BOX

Views corresponding to version L
(Connections on the left side)

	External		Connections		Suports		Weight (kg)
Model	A	B	C	D	E	F	
UTBS-2	750	360	690	300	704	790	53
UTBS-3	1100	410	1040	350	704	1140	86
UTBS-5	1500	410	1440	350	704	1540	110
UTBS-8	1900	500	1840	440	704	1940	135

DIMENSIONS (mm)

Long version: F7 filter and capacity for mounting one additional filter
Configuration without coils (For ventilation applications)

P: Prefilter G4/M5 (accessory)
F: Filter F7

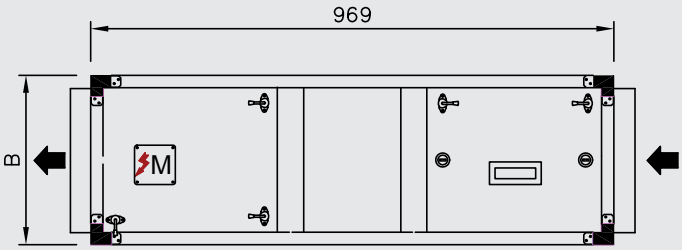

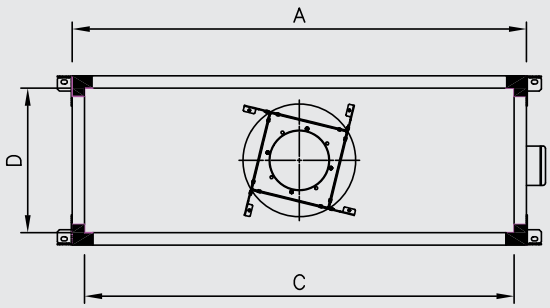

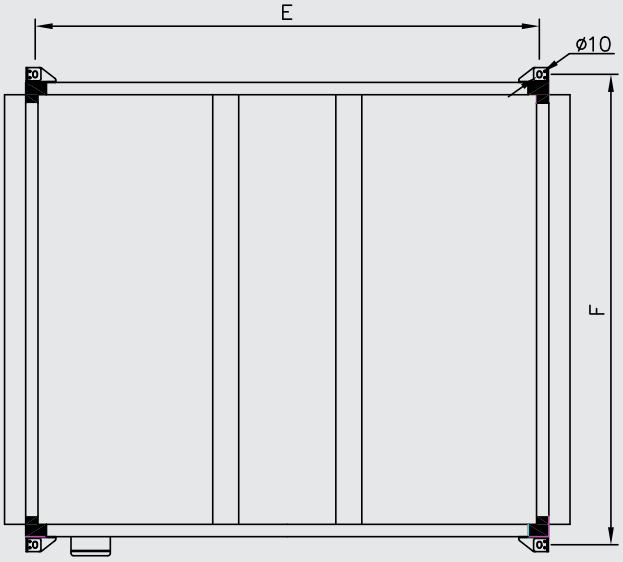

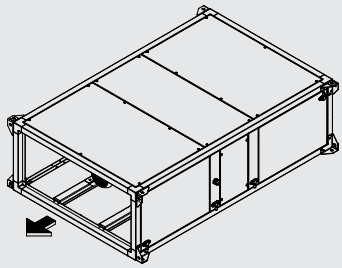

AIR DIRECTION
M FANS TERMINAL BOX

Views corresponding to version L
(Connections on the left side)

	External		Connections		Suports		Weight (kg)
Model	A	B	C	D	E	F	
UTBS-2	750	360	690	300	940	790	63
UTBS-3	1100	410	1040	350	940	1140	96
UTBS-5	1500	410	1440	350	940	1540	125
UTBS-8	1900	500	1840	440	940	1940	155

DIMENSIONS (mm)

Short version: Single filter M5
Configuration with electric battery

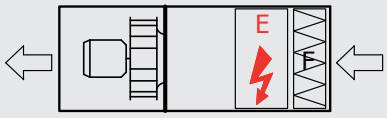

F: Filter M5
E: Electric battery (E4,5 to E45)

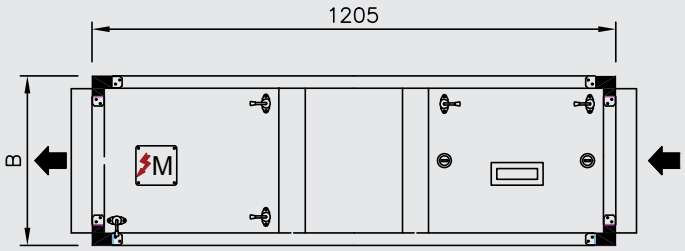

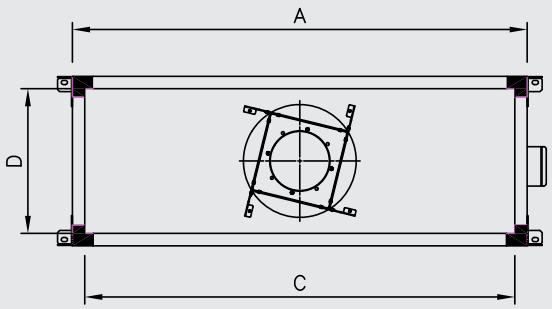

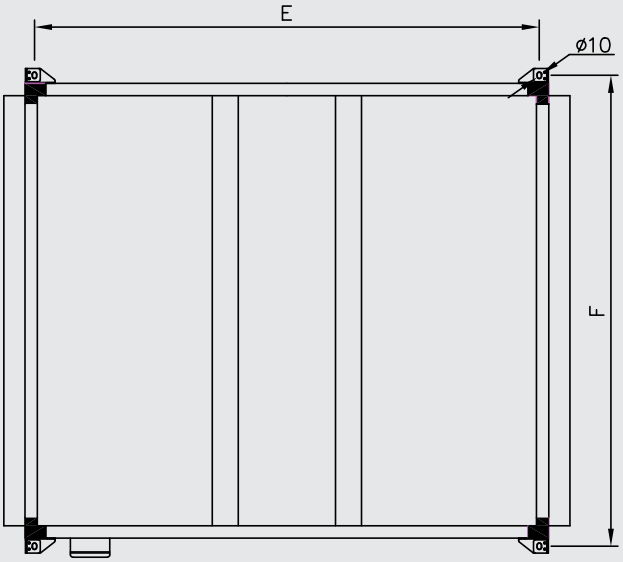

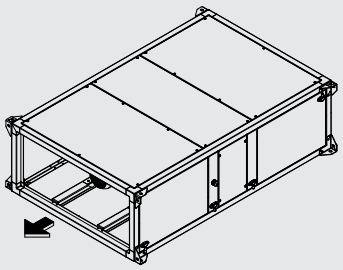

AIR DIRECTION
M FANS TERMINAL BOX

Views corresponding to version L
(Connections on the left side)

Model	External		Connections		Suports		Weight (kg)
	A	B	C	D	E	F	
UTBS-2	750	360	690	300	1159	790	86
UTBS-3	1100	410	1040	350	1159	1140	118
UTBS-5	1500	410	1440	350	1159	1540	174
UTBS-8	1900	500	1840	440	1159	1940	218

DIMENSIONES (mm)

Long version: F7 filter and capacity for mounting one additional filter
Configuration with electric battery

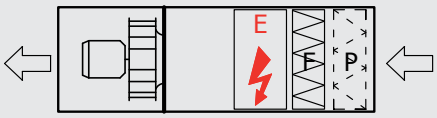

P: Prefilter G4/M5 (accessory)
F: Filter F7
E: Electric battery (E4,5 to E45)

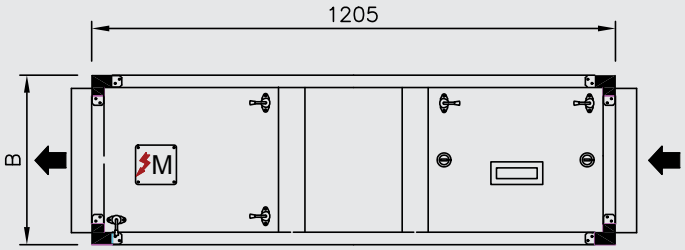

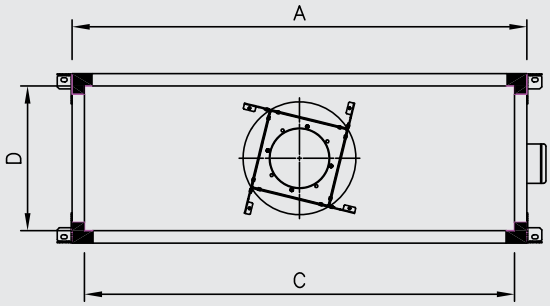

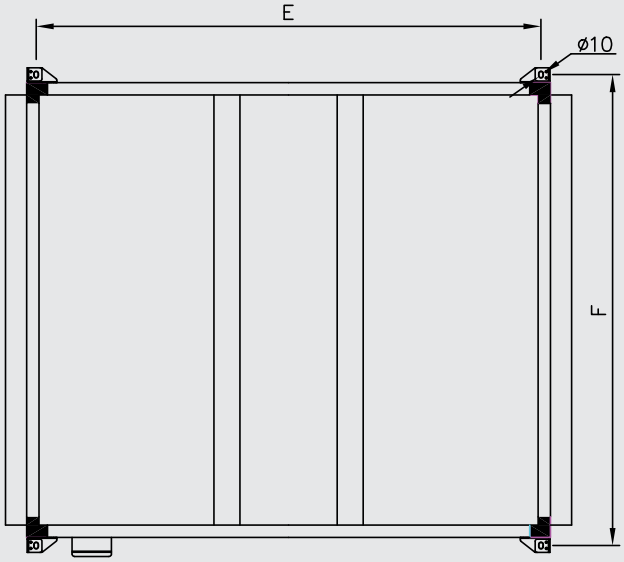

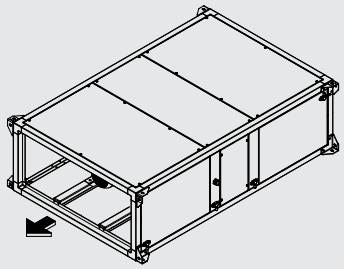

AIR DIRECTION
M FANS TERMINAL BOX

Views corresponding to version L
(Connections on the left side)

	External		Connections		Suports		Weight (kg)
Model	A	B	C	D	E	F	
UTBS-2	750	360	690	300	1159	790	86
UTBS-3	1100	410	1040	350	1159	1140	118
UTBS-5	1500	410	1440	350	1159	1540	174
UTBS-8	1900	500	1840	440	1159	1940	218

DIMENSIONS (mm)

Short version: Single filter M5
Configuration with hot water coil

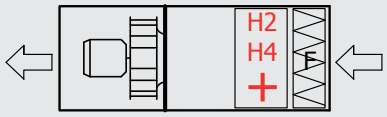

F: Filter M5
H2/H4: Hot water coil (2 Rows/4 Rows)

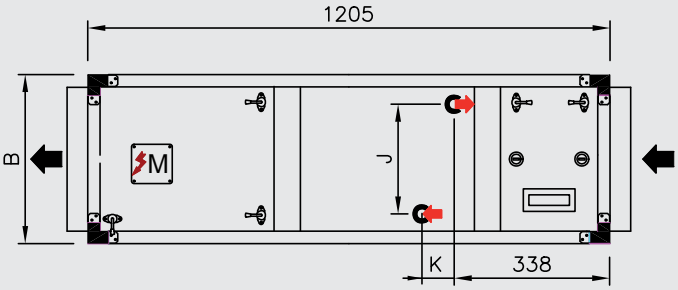

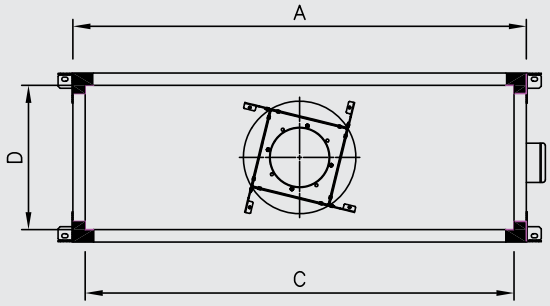

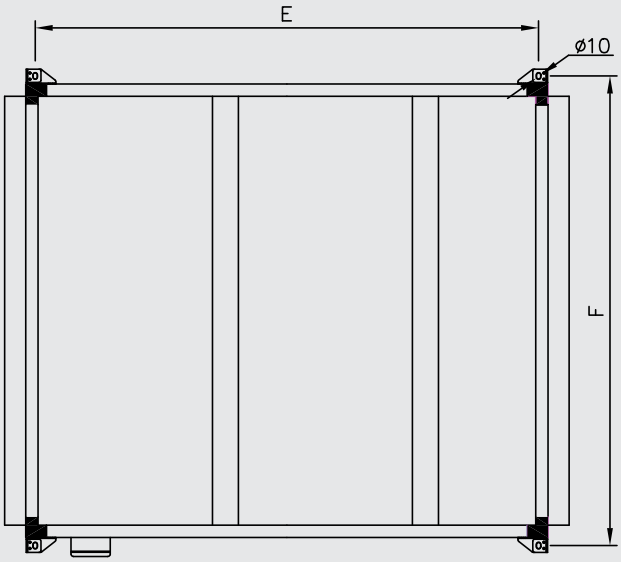

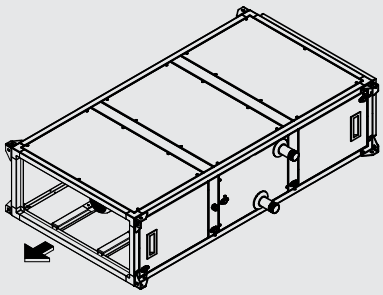

AIR DIRECTION
M FANS TERMINAL BOX
HOT WATER INLET
HOT WATER OUTLET

Views corresponding to version L
(Connections on the left side)

	External		Connections		Suports		Coils			Weight (kg)	
Model	**A**	**B**	**C**	**D**	**E**	**F**	**J**	**K**	**Connections**	**H2**	**H4**
UTBS-2	750	360	690	300	1159	790	219	80	1-1/4"	97	100
UTBS-3	1100	410	1040	350	1159	1140	269	80	1-1/4"	131	135
UTBS-5	1500	410	1440	350	1159	1540	269	80	1-1/4"	188	204
UTBS-8	1900	500	1840	440	1159	1940	344	80	1-1/2"	233	245

DIMENSIONS (mm)

Long version: F7 filter and capacity for mounting one additional filter
Configuration with hot water coil

P: Prefilter G4/M5 (accessory)
F: Filter F7
H2/H4: Hot water coil (2 Rows/4 Rows)

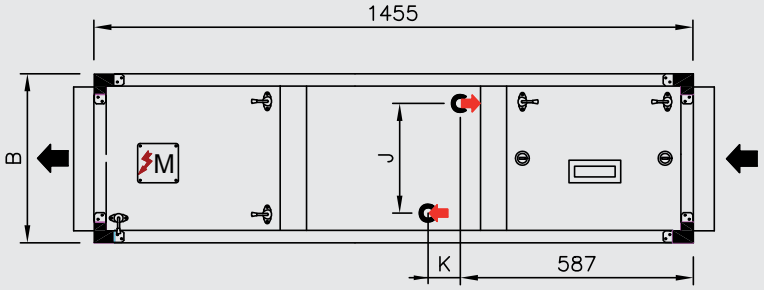

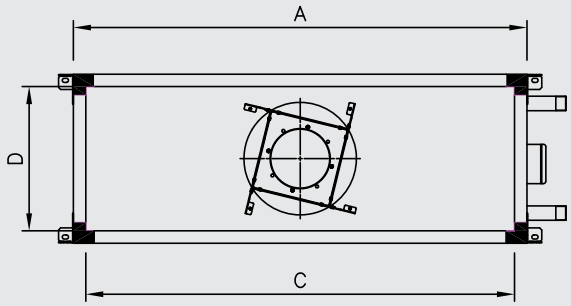

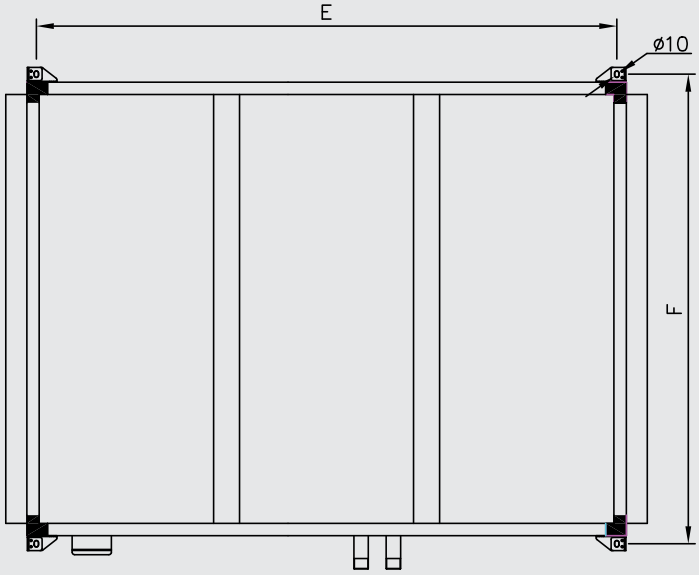

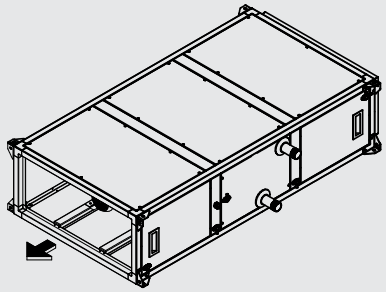

AIR DIRECTION
M FANS TERMINAL BOX
HOT WATER INLET
HOT WATER OUTLET

Views corresponding to version L
(Connections on the left side)

	External		Connections		Suports		Coils			Weight (kg)	
Model	**A**	**B**	**C**	**D**	**E**	**F**	**J**	**K**	**Connections**	**H2**	**H4**
UTBS-2	750	360	690	300	1409	790	219	80	1-1/4"	97	100
UTBS-3	1100	410	1040	350	1409	1140	269	80	1-1/4"	131	135
UTBS-5	1500	410	1440	350	1409	1540	269	80	1-1/4"	188	204
UTBS-8	1900	500	1840	440	1409	1940	344	80	1-1/2"	233	245

DIMENSIONS (mm)

Short version: Single filter M5
Configuration with cold water coil

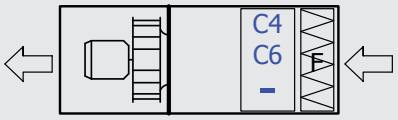

F: Filter M5
C4/C6: Cold water coil (4 Rows/6 Rows)

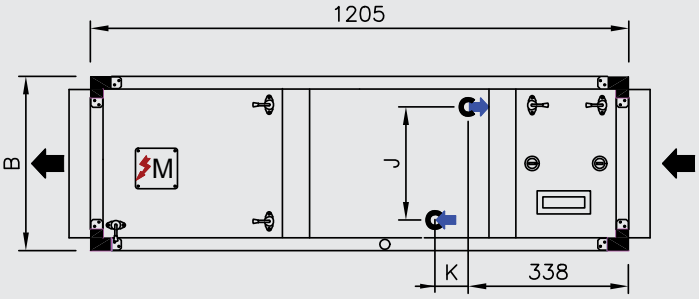

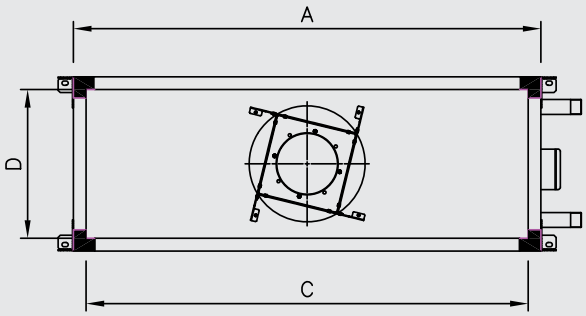

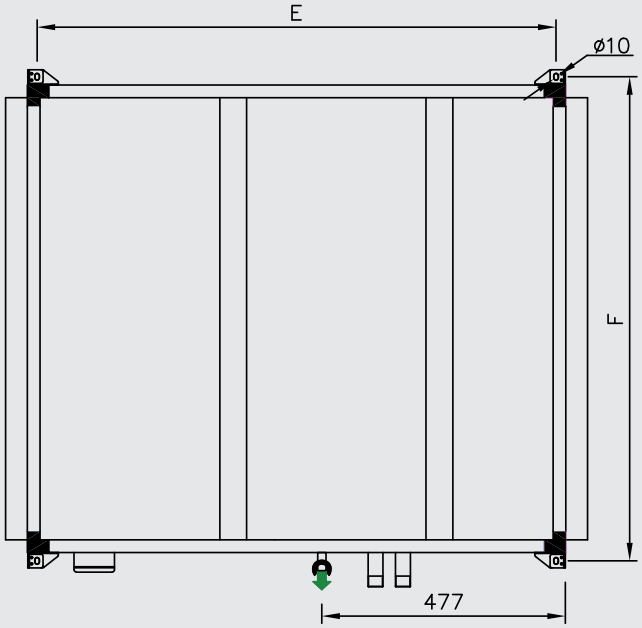

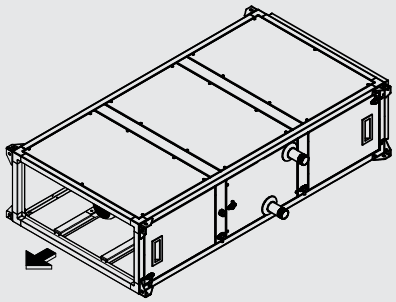

AIR DIRECTION
M FANS TERMINAL BOX
COLD WATER INLET
COLD WATER OUTLET
DRAIN OUTLET 3/4"

Views corresponding to version L
(Connections on the left side)

	External		Connections		Suports		Coils				Weight (kg)	
Model	**A**	**B**	**C**	**D**	**E**	**F**	**J**	**K (C4/C6)**		**Connections**	**C4**	**C6**
UTBS-2	750	360	690	300	1159	790	219	80	120	1-1/4"	105	107
UTBS-3	1100	410	1040	350	1159	1140	269	80	120	1-1/4"	142	147
UTBS-5	1500	410	1440	350	1159	1540	269	80	120	1-1/4"	204	210
UTBS-8	1900	500	1840	440	1159	1940	344	80	120	1-1/2"	258	268

DIMENSIONS (mm)

Long version: F7 filter and capacity for mounting one additional filter
Configuration with cold water coil

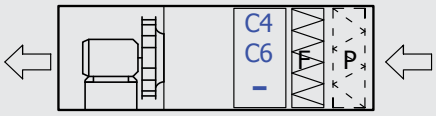

P: Prefilter G4/M5 (accessory)
F: Filter F7
C4/C6: Cold water coil (4 Rows/6 Rows)

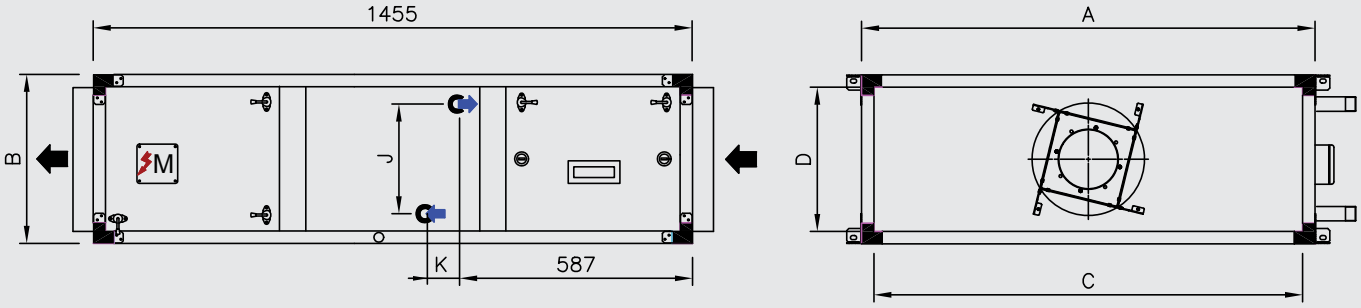

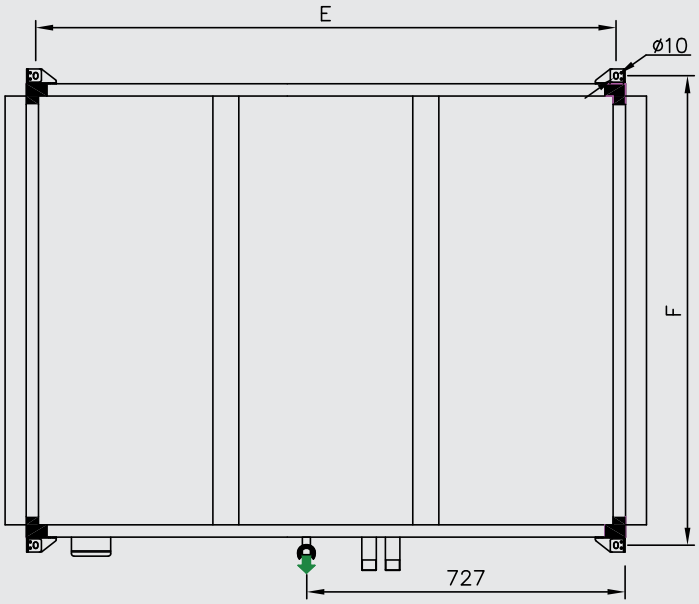

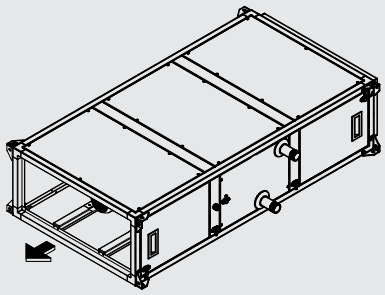

AIR DIRECTION
M FANS TERMINAL BOX
COLD WATER INLET
COLD WATER OUTLET
DRAIN OUTLET 3/4"

Views corresponding to version L
(Connections on the left side)

	External		Connections		Suports		Coils				Weight (kg)	
Model	A	B	C	D	E	F	J	K (C4/C6)		Connections	C4	C6
UTBS-2	750	360	690	300	1409	790	219	80	120	1-1/4"	105	107
UTBS-3	1100	410	1040	350	1409	1140	269	80	120	1-1/4"	142	147
UTBS-5	1500	410	1440	350	1409	1540	269	80	120	1-1/4"	204	210
UTBS-8	1900	500	1840	440	1409	1940	344	80	120	1-1/2"	258	268

DIMENSIONS (mm)

Short version: Single filter M5
Configuration with electric battery and cold water

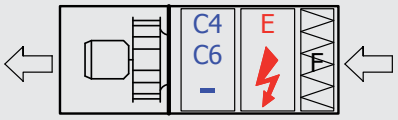

F: Filter M5
E: Electric battery (E4,5 to E45)
C4/C6: Cold water coil (4 Rows/6 Rows)

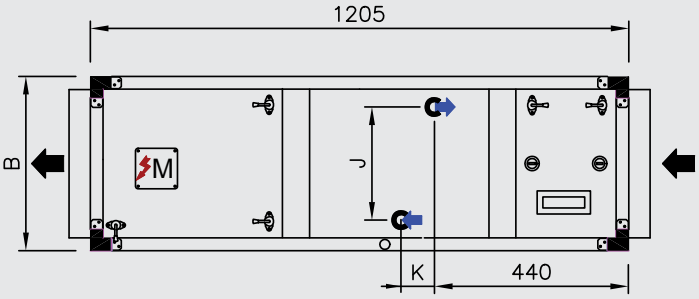

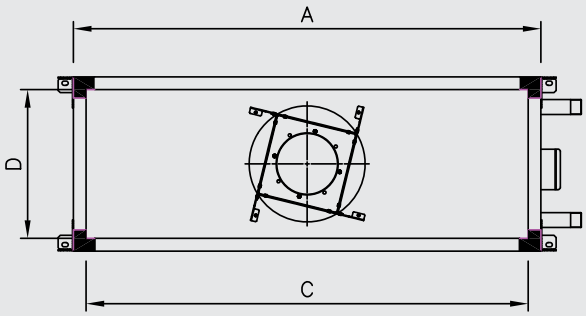

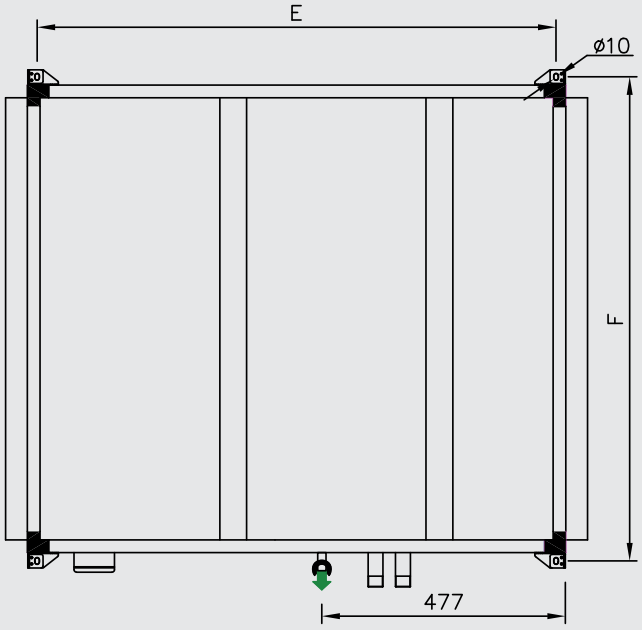

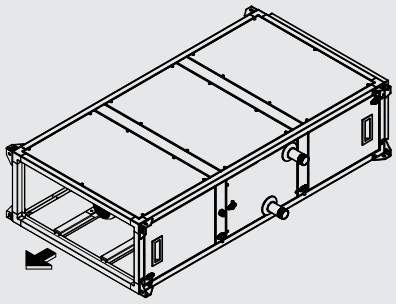

AIR DIRECTION
M FANS TERMINAL BOX
COLD WATER INLET
COLD WATER OUTLET
DRAIN OUTLET 3/4"

Views corresponding to version L
(Connections on the left side)

	External		Connections		Suports		Coils				Weight (kg)	
Model	**A**	**B**	**C**	**D**	**E**	**F**	**J**	**K (C4/C6)**		**Connections**	**C4**	**C6**
UTBS-2	750	360	690	300	1159	790	219	80	120	1-1/4"	105	107
UTBS-3	1100	410	1040	350	1159	1140	269	80	120	1-1/4"	142	147
UTBS-5	1500	410	1440	350	1159	1540	269	80	120	1-1/4"	204	210
UTBS-8	1900	500	1840	440	1159	1940	344	80	120	1-1/2"	258	268

DIMENSIONS (mm)

Long version: F7 filter and capacity for mounting one additional filter
Configuration with electric battery and cold water

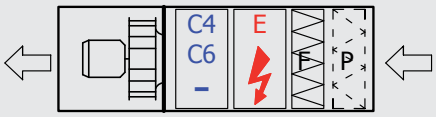

P: Prefilter G4/M5 (accessory)
F: Filter F7
E: Electric battery (E4,5 to E45)
C4/C6: Cold water coil (4 Rows/6 Rows)

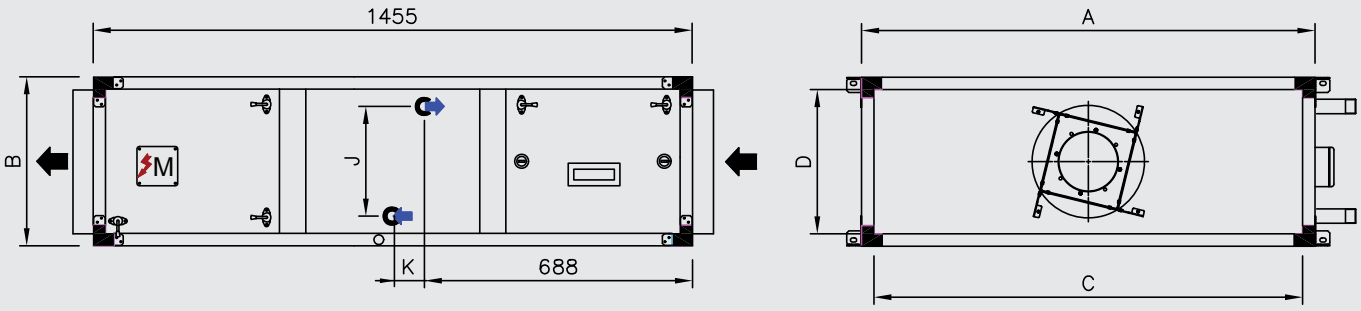

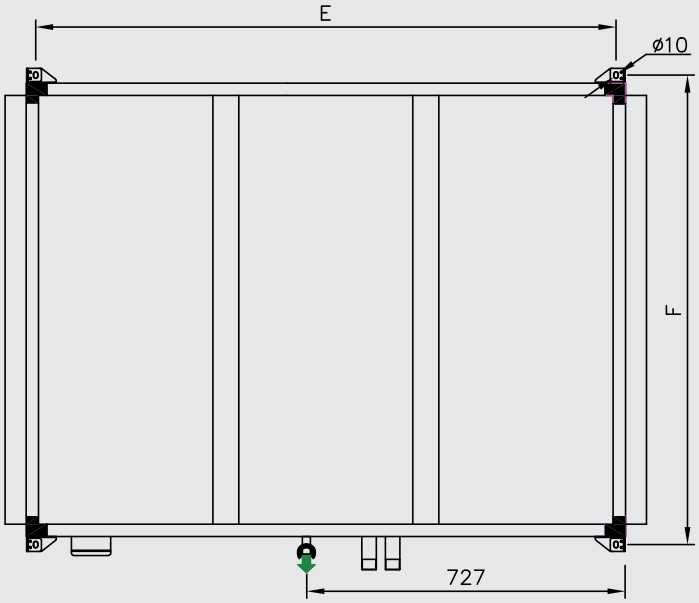

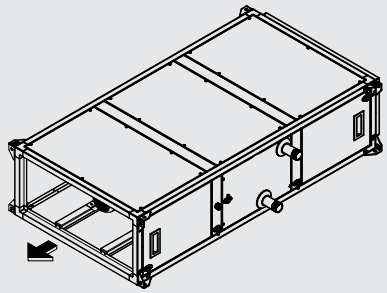

AIR DIRECTION
M FANS TERMINAL BOX
COLD WATER INLET
COLD WATER OUTLET
DRAIN OUTLET 3/4"

Views corresponding to version L
(Connections on the left side)

	External		Connections		Suports		Coils				Weight (kg)	
Model	A	B	C	D	E	F	J	K (C4/C6)		Connections	C4	C6
UTBS-2	750	360	690	300	1409	790	219	80	120	1-1/4"	105	107
UTBS-3	1100	410	1040	350	1409	1140	269	80	120	1-1/4"	142	147
UTBS-5	1500	410	1440	350	1409	1540	269	80	120	1-1/4"	204	210
UTBS-8	1900	500	1840	440	1409	1940	344	80	120	1-1/2"	258	268

DIMENSIONS (mm)

Short version: Single filter M5
Configuration with hot water coil and cold water coil

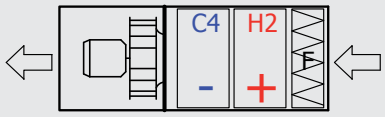

F: Filter M5
H2: Hot water coil (2 Rows/4 Rows)
C4: Cold water coil (4 Rows)

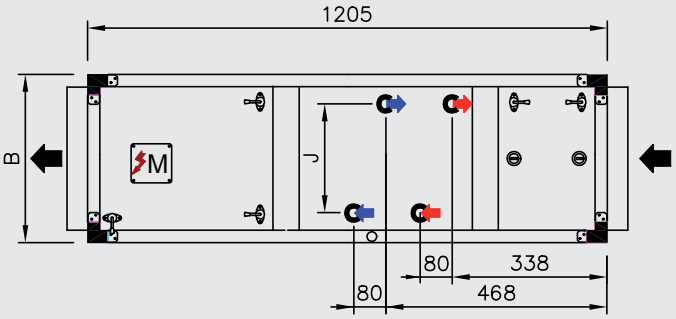

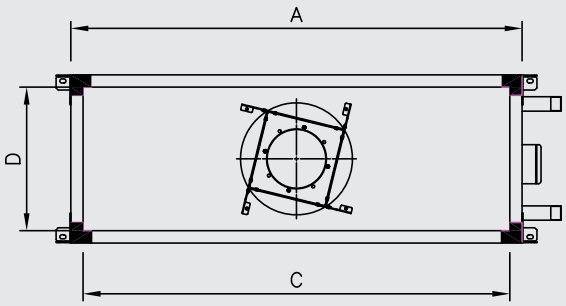

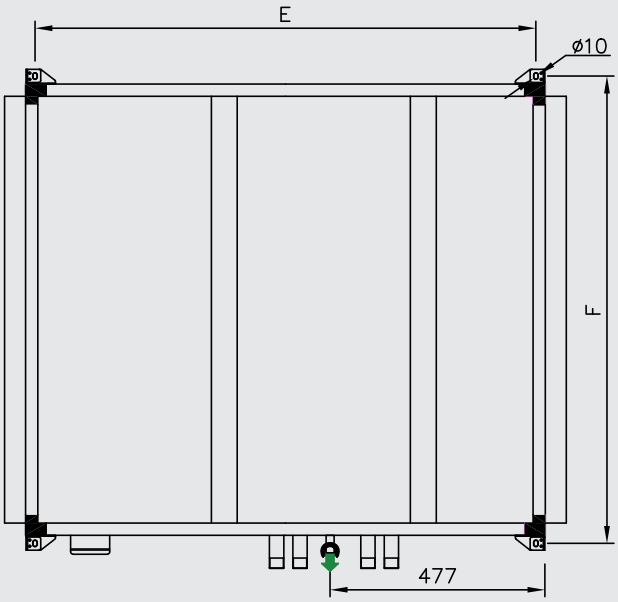

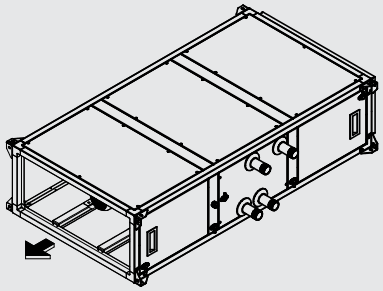

- AIR DIRECTION
- M FANS TERMINAL BOX
- HOT WATER INLET
- HOT WATER OUTLET
- COLD WATER INLET
- COLD WATER OUTLET
- DRAIN OUTLET 3/4"

Views corresponding to version L
(Connections on the left side)

	External		Connections		Suports		Coils			Weight (kg)
Model	A	B	C	D	E	F	J	Connections C4 / H2		
UTBS-2	750	360	690	300	1159	790	219	1-1/4"	1-1/4"	111
UTBS-3	1100	410	1040	350	1159	1140	269	1-1/4"	1-1/4"	151
UTBS-5	1500	410	1440	350	1159	1540	269	1-1/4"	1-1/4"	216
UTBS-8	1900	500	1840	440	1159	1940	344	1-1/2"	1-1/2"	272

DIMENSIONS (mm)

Long version: F7 filter and capacity for mounting one additional filter
Configuration with hot water coil and cold water coil

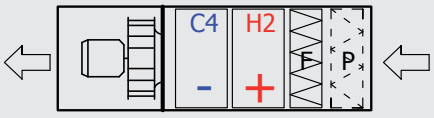

P: Prefilter G4/M5 (accessory)
F: Filter F7
H2: Hot water coil (2 Rows)
C4: Cold water coil (4 Rows)

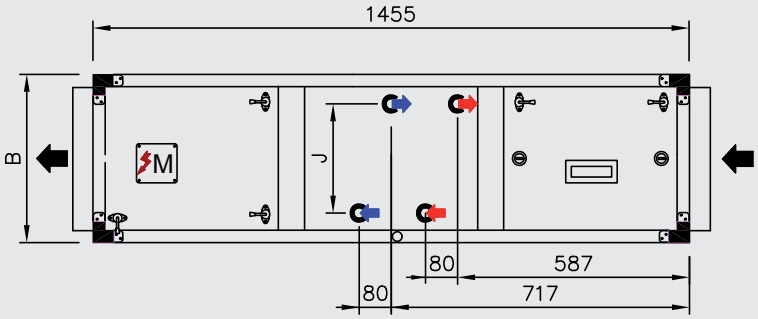

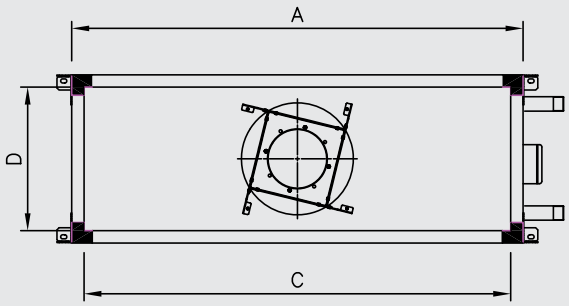

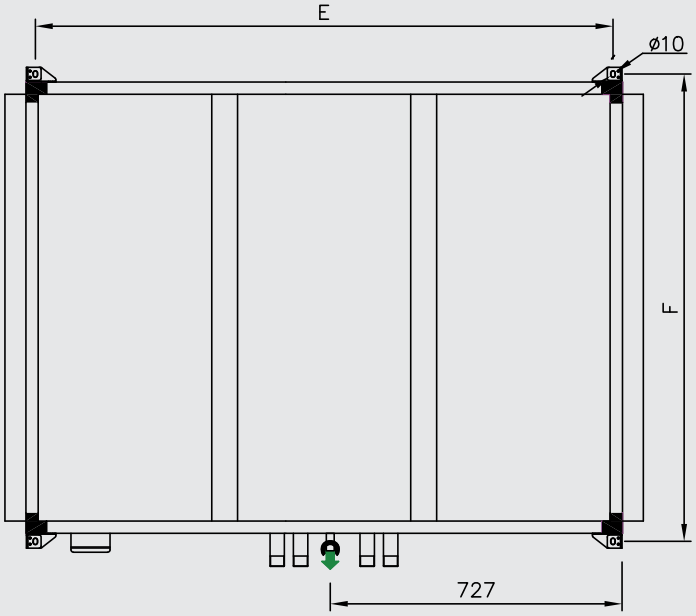

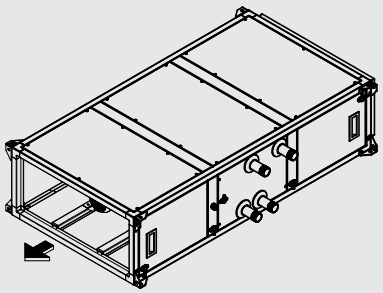

- AIR DIRECTION
- M FANS TERMINAL BOX
- HOT WATER INLET
- HOT WATER OUTLET
- COLD WATER INLET
- COLD WATER OUTLET
- DRAIN OUTLET 3/4"

Views corresponding to version L
(Connections on the left side)

	External		Connections		Suports		Coils			Weight (kg)
Model	A	B	C	D	E	F	J	Connections C4 / H2		
UTBS-2	750	360	690	300	1409	790	219	1-1/4"	1-1/4"	111
UTBS-3	1100	410	1040	350	1409	1140	269	1-1/4"	1-1/4"	151
UTBS-5	1500	410	1440	350	1409	1540	269	1-1/4"	1-1/4"	216
UTBS-8	1900	500	1840	440	1409	1940	344	1-1/2"	1-1/2"	272

DIMENSIONS (mm)

Short version: Single filter M5
Configuration with hot water coil and cold water coil

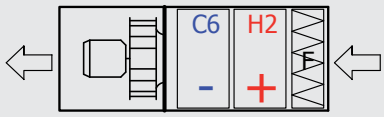

F: Filter M5
H2: Hot water coil (2 Rows)
C6: Cold water coil (6 Rows)

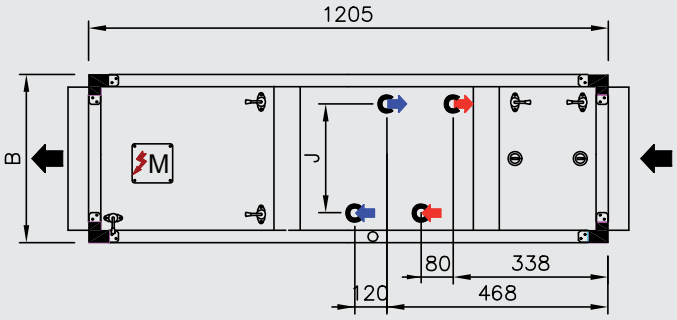

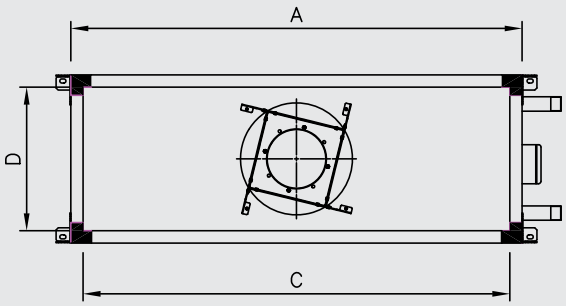

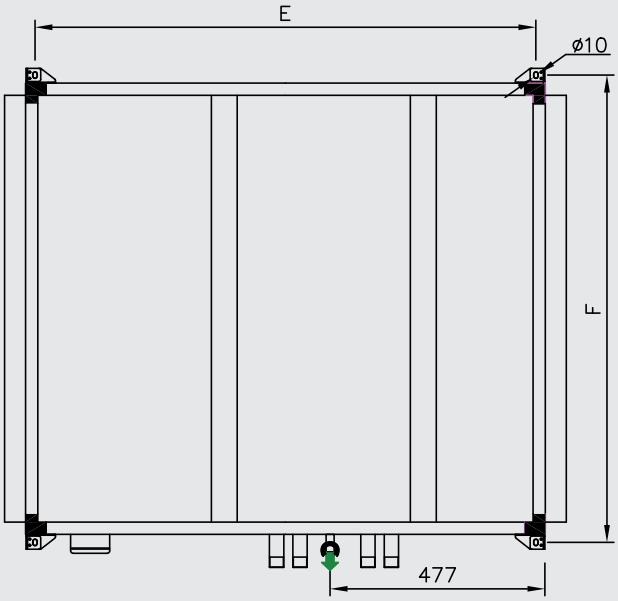

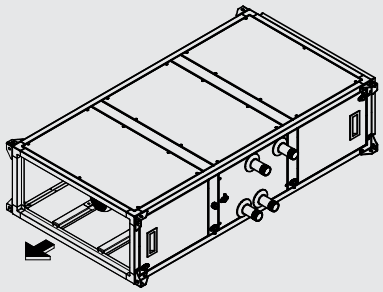

- AIR DIRECTION
- FANS TERMINAL BOX
- HOT WATER INLET
- HOT WATER OUTLET
- COLD WATER INLET
- COLD WATER OUTLET
- DRAIN OUTLET 3/4"

Views corresponding to version L
(Connections on the left side)

	External		Connections		Suports		Coils			Weight (kg)
Model	A	B	C	D	E	F	J	Connections C6 / H2		
UTBS-2	750	360	690	300	1159	790	219	1-1/4"	1-1/4"	113
UTBS-3	1100	410	1040	350	1159	1140	269	1-1/4"	1-1/4"	156
UTBS-5	1500	410	1440	350	1159	1540	269	1-1/4"	1-1/4"	222
UTBS-8	1900	500	1840	440	1159	1940	344	1-1/2"	1-1/2"	282

DIMENSIONS (mm)

Long version: F7 filter and capacity for mounting one additional filter
Configuration with hot water coil and cold water coil

P: Prefilter G4/M5 (accessory)
F: Filter F7
H2: Hot water coil (2 Rows)
C6: Cold water coil (6 Rows)

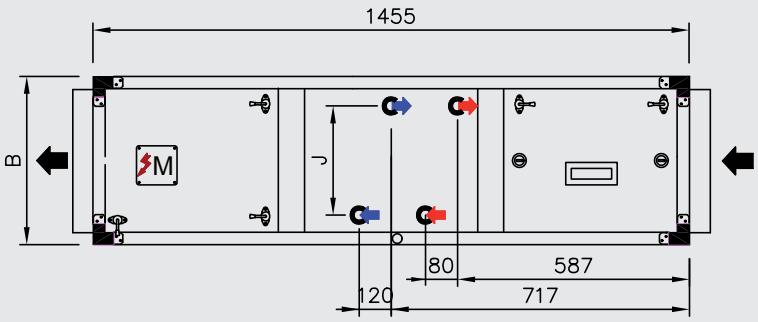

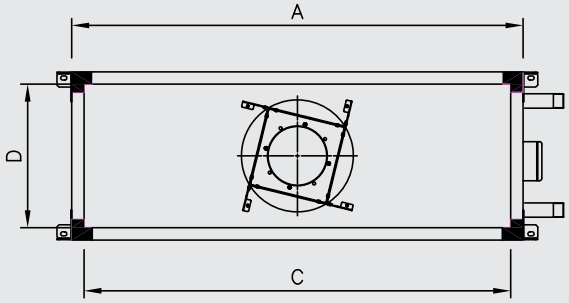

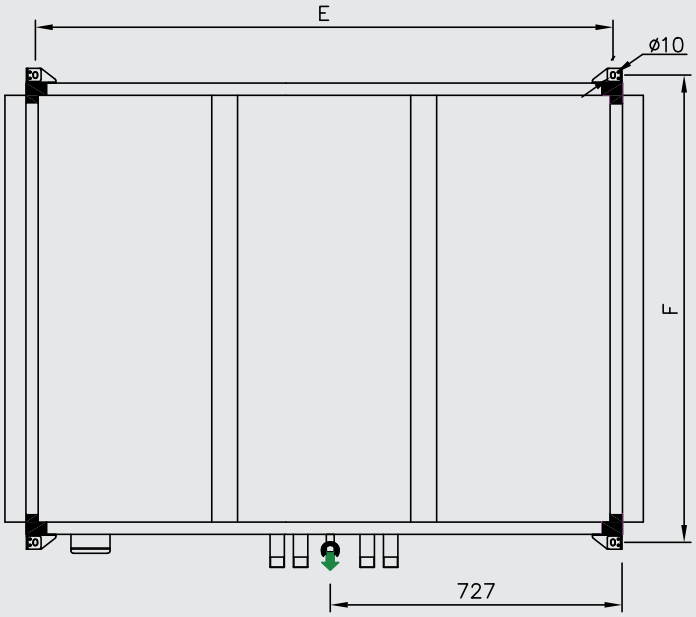

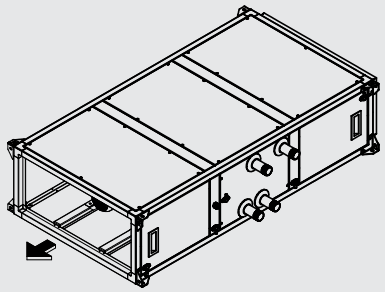

- AIR DIRECTION
- FANS TERMINAL BOX
- HOT WATER INLET
- HOT WATER OUTLET
- COLD WATER INLET
- COLD WATER OUTLET
- DRAIN OUTLET 3/4"

Views corresponding to version L
(Connections on the left side)

	External		Connections		Suports		Coils			Weight (kg)
Model	A	B	C	D	E	F	J	Connections C6 / H2		
UTBS-2	750	360	690	300	1409	790	219	1-1/4"	1-1/4"	113
UTBS-3	1100	410	1040	350	1409	1140	269	1-1/4"	1-1/4"	156
UTBS-5	1500	410	1440	350	1409	1540	269	1-1/4"	1-1/4"	222
UTBS-8	1900	500	1840	440	1409	1940	344	1-1/2"	1-1/2"	282

DIMENSIONS (mm)

Short version: Single filter M5
Configuration with direct expansion coil

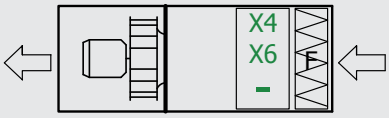

F: Filter M5
X4/X6: Direct expansion coil (4 Rows/6 Rows)

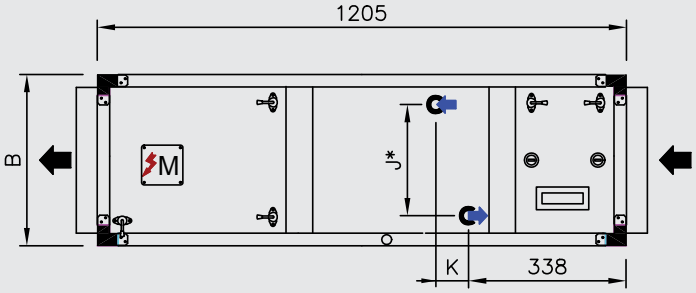

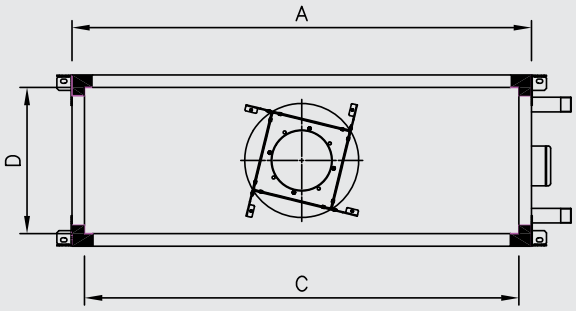

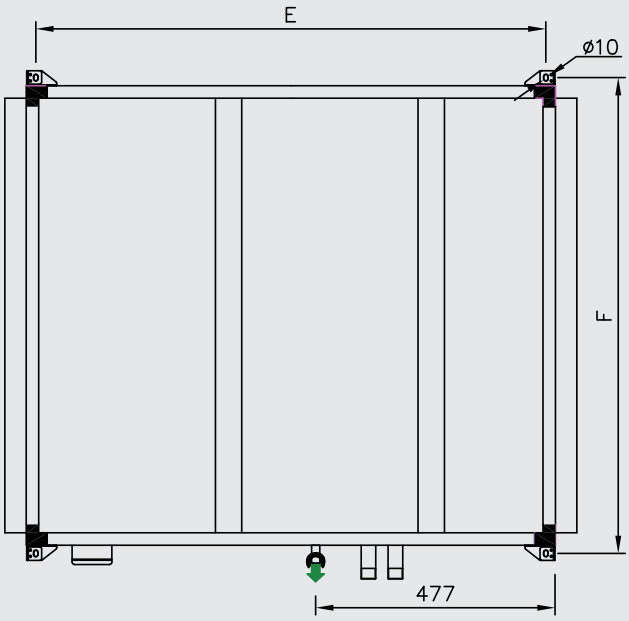

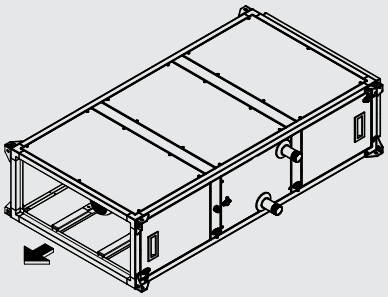

AIR DIRECTION
FANS TERMINAL BOX
REFRIGERANT INLET
REFRIGERANT OUTLET
DRAIN OUTLET 3/4"

Views corresponding to version L
(Connections on the left side)

	External		Connections		Suports		J	K (X4/X6)		Coils: Inlet Connection (X4/X6)		Coils: Outlet Connection (X4/X6)		Weight (kg)	
Model	A	B	C	D	E	F								C4	C6
UTBS-2	750	360	690	300	1159	790	232	80	120	3/8"	1/2"	5/8"	5/8"	105	107
UTBS-3	1100	410	1040	350	1159	1140	280	80	108	1/2"	1/2"	5/8"	5/8"	142	147
UTBS-5	1500	410	1440	350	1159	1540	280	80	100	1/2"	1/2"	5/8"	3/4"	204	210
UTBS-8	1900	500	1840	440	1159	1940	355*	55	120	1/2"	2 x 1/2"	5/8"	2 x 3/4"	258	268

* On the UTBS-8 model with coil X6 the coil is two-stage (double inlet and outlet connection).

DIMENSIONS (mm)

Long version: F7 filter and capacity for mounting one additional filter
Configuration with direct expansion coil

P: Prefilter G4/M5 (accessory)
F: Filter F7
X4/X6: Direct expansion coil (4 Rows/6 Rows)

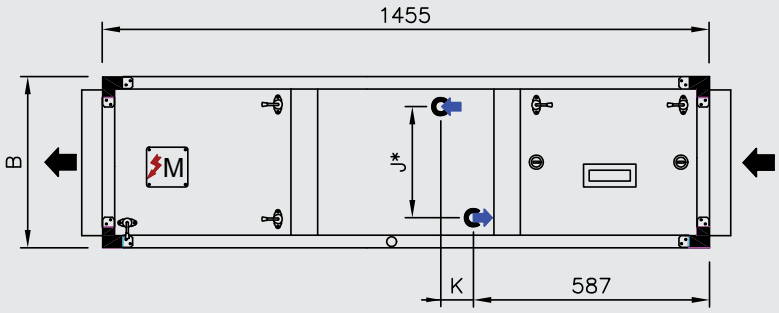

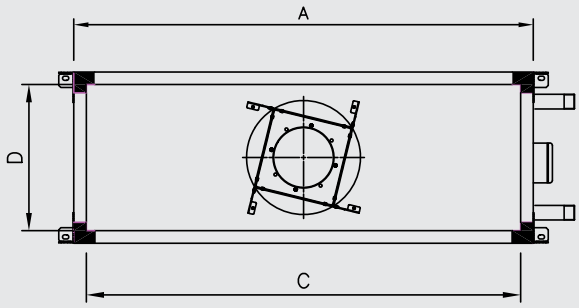

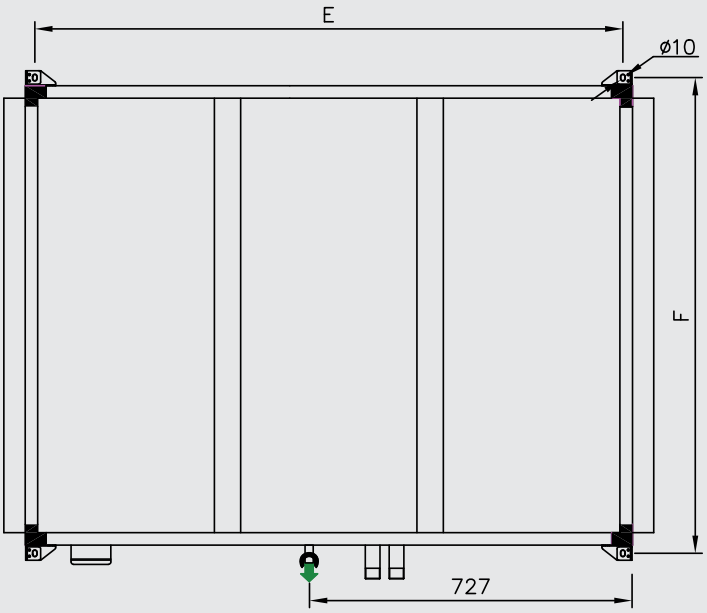

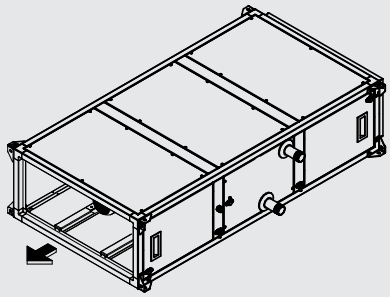

AIR DIRECTION
M FANS TERMINAL BOX
REFRIGERANT INLET
REFRIGERANT OUTLET
DRAIN OUTLET 3/4"

Views corresponding to version L
(Connections on the left side)

	External		Connections		Suports		J	K (X4/X6)		Coils: Inlet Connection (X4/X6)		Coils: Outlet Connection (X4/X6)		Weight (kg)	
Model	A	B	C	D	E	F								C4	C6
UTBS-2	750	360	690	300	1409	790	232	80	120	3/8"	1/2"	5/8"	5/8"	105	107
UTBS-3	1100	410	1040	350	1409	1140	280	80	108	1/2"	1/2"	5/8"	5/8"	142	147
UTBS-5	1500	410	1440	350	1409	1540	280	80	100	1/2"	1/2"	5/8"	3/4"	204	210
UTBS-8	1900	500	1840	440	1409	1940	355*	55	120	1/2"	2 x 1/2"	5/8"	2 x 3/4"	258	268

* On the UTBS-8 model with coil X6 the coil is two-stage (double inlet and outlet connection).

REFERENCE

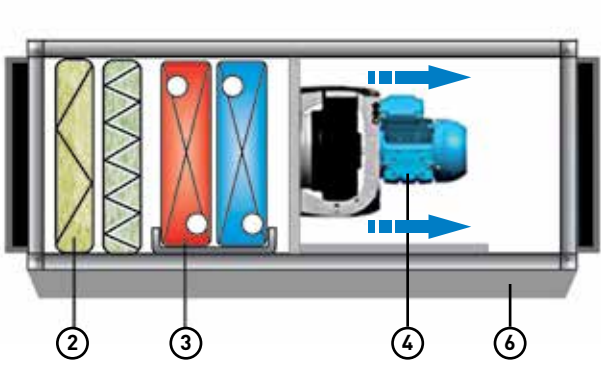

U	T	B	S	-	5	P F7	H	2	0,75	kW	R	B
1						2	3		4		5	6

1. **SIZE**

   UTBS-2
   UTBS-3
   UTBS-5
   UTBS-8

2. **FILTERING STAGE**

   P F7: Filter F7 with capacity for mounting an additional filter inside the unit (accessory). Tightening system for high sealing filters, by means of articulated arms.

   M5: Filter mounted by means of a guide system without filter clamping devices. It does not allow the installation of additional filters.

3. **COIL STAGE**

   Ø: Without coil
   E: Electric battery from 4,5 kW to 45kW.
   H2: 2-row hot water coil
   H4: 4-row hot water coil
   C4: 4-row cold water coil
   C6: 6-row cold water coil
   X4: 4-row direct expansion coil
   X6: 6-row direct expansion coil
   H2 C4: 2-rows hot water coil + 4-rows cold water coil
   H2 C6: 2-rows hot water coil + 6-rows cold water coil
   E C4: Electric battery + 4-rows cold water coil
   E C6: Electric battery + 6-rows cold water coil

4. **MOTOR POWER**

   0,55 kW for UTBS-2
   0,55 kW or 1,1kW for UTBS-3
   1,1 kW or 2,2kW for UTBS-5 (2 fans of 0,55kW or 1,1kW)
   1,5 kW or 3,0kW for UTBS-8 (2 fans of 0,75kW or 1,5kW)

5. **CONNECTION SIDE (according to air direction)**

   R: Right connections
   L: Left connections

6. **STRUCTURAL BASE**

   B: With structural base (factory mounted)
   Ø: Without structural base

MODULES REFERENCES

The modules are supplied without flanges. To connect a module to the UTBS main module, it is necessary to remove the flange from the main module and transfer it to the input/output of the accessory module.

PLENUM

PB	-	8	B
		1	2

1. **SIZE**
   2, 3, 5 and 8
2. **STRUCTURAL BASE**
   B: With structural base
   Ø: Without structural base

FILTRATION BOX

FB	-	8	P F9	L	B
		1	2	3	4

1. **SIZE**
   2, 3, 5 and 8
2. **FILTERS**
   P F7: Filter F7 + additional filter mounting option
   P F9: Filter F9 + additional filter mounting possibility
3. **REGISTRATION**
   R: Right
   L: Left
4. **STRUCTURAL BASE**
   B: With structural base
   Ø: Without structural base

COIL BOX

CB	-	8	H2 C4	R	B
		1	2	3	4

1. **SIZE**
   2, 3, 5 and 8
2. **COIL STAGE**
   H2: Hot water coil 2 rows
   H4: Hot water coil 4 rows
   C4: Cold water coil 4 rows
   C6: Cold water coil 6 rows
   X4: Direct expansion coil 4 rows
   X6: 6-row direct expansion coil
   H2 C4: 2-rows hot water coil + 4-rows cold water coil
   H2 C6: 2-rows hot water coil + 6-rows cold water coil
   E C4: Electric battery + 4-rows cold water coil
   E C6: Electric battery + 6-rows cold water coil
   E X4: Electric battery + 4-rows direct expansion coil
   E X6: Electric battery + 6-rows direct expansion coil
3. **CONNECTIONS**
   R: Right
   L: Left
4. **STRUCTURAL BASE**
   B: With structural base
   Ø: Without structural base

2-WAYS MIXING BOX

2M	A	-	2	B
	1		2	3

1. **CONFIGURATION**
   A, B, D and E
   See the corresponding page for details about each available configuration
2. **SIZE**
   2, 3, 5 and 8
3. **STRUCTURAL BASE**
   B: With structural base
   Ø: Without structural base

SOUND ATTENUATOR

SIL	-	8	750	B
		1	2	3

1. **SIZE**
   2, 3, 5 and 8
2. **SOUND ATTENUATOR LENGTH**
   750
3. **STRUCTURAL BASE**
   B: With structural base
   Ø: Without structural base

CHARACTERISTIC CURVES

- q_v: Airflow in m³/h.
- p_{sf}: Static pressure in Pa.
- Pabs: Absorbed power at maximum speed (W).
- Dry air at 20ºC and 760 mmHg.
- Performance data in accordance with ISO 5801 and AMCA 210-99.

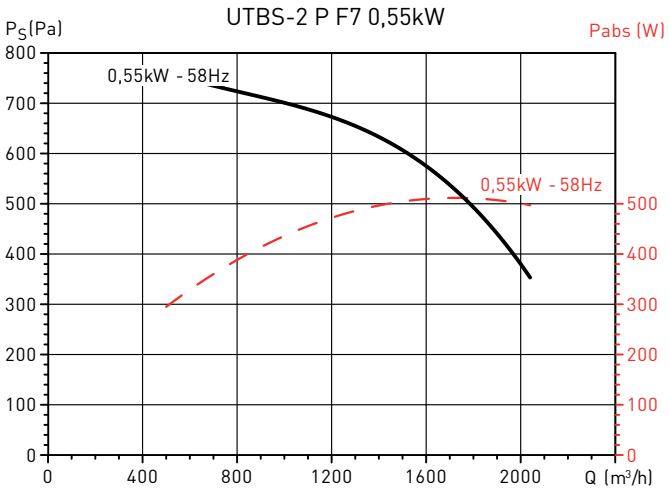

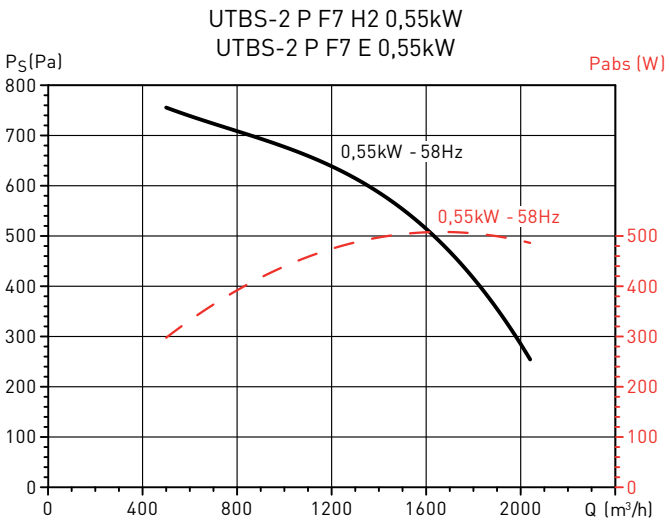

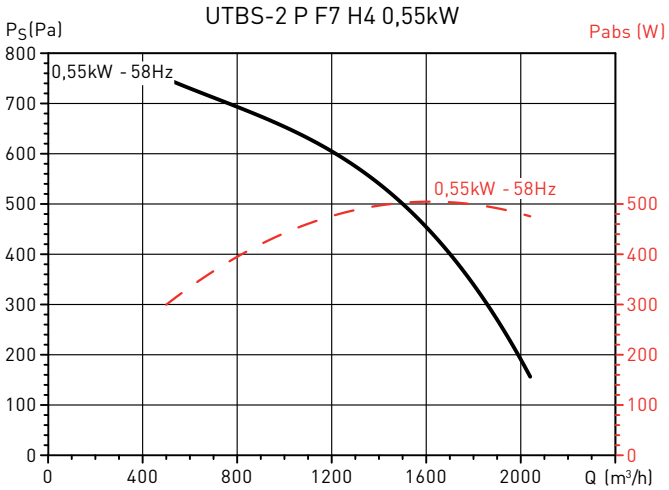

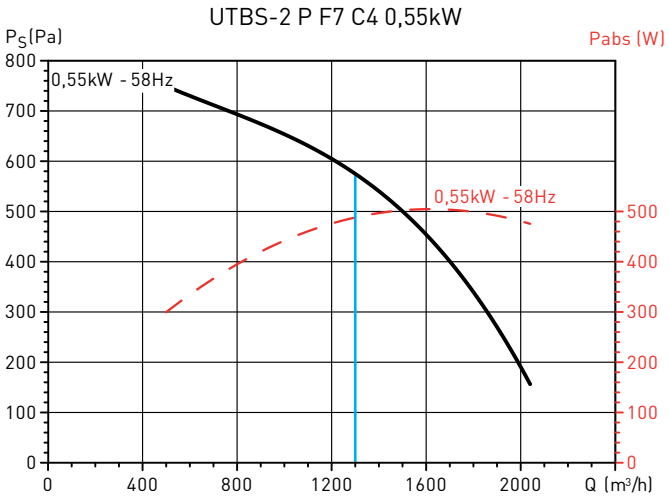

Recommended limit to avoid droplep drag.

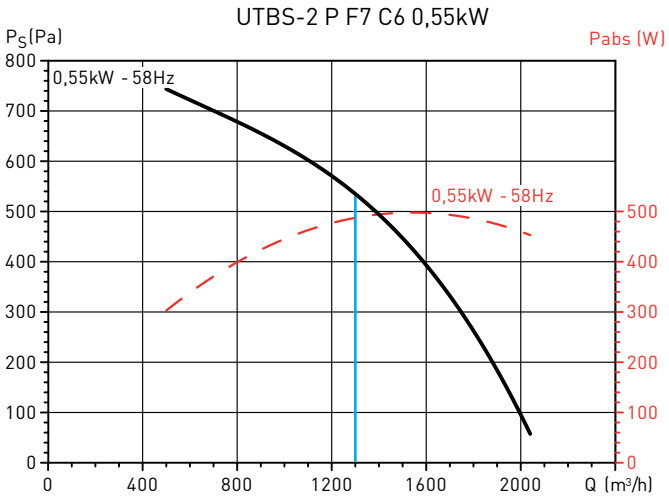

Recommended limit to avoid droplep drag.

CHARACTERISTIC CURVES

- q_v: Airflow in m³/h.
- p_{sf}: Static pressure in Pa.
- Pabs: Absorbed power at maximum speed (W).
- Dry air at 20ºC and 760 mmHg.
- Performance data in accordance with ISO 5801 and AMCA 210-99.

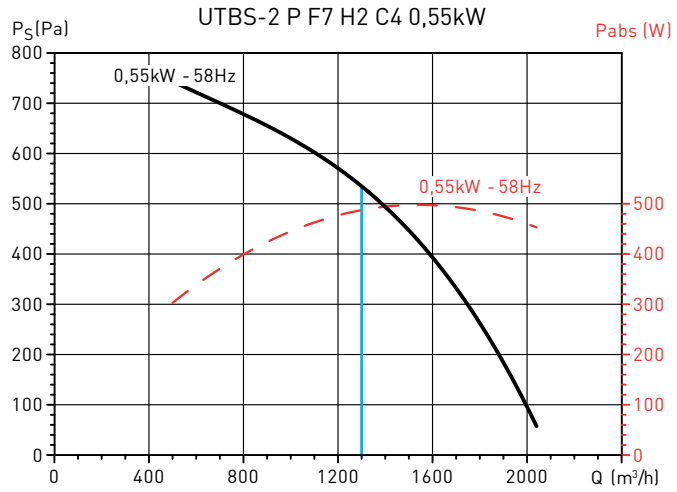

Recommended limit to avoid droplep drag.

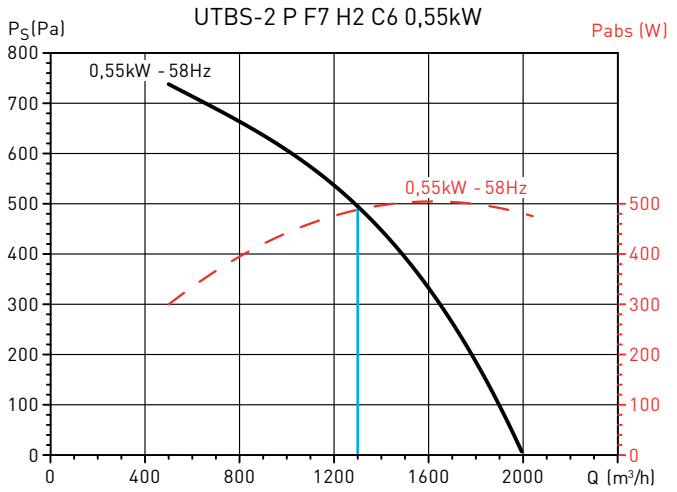

Recommended limit to avoid droplep drag.

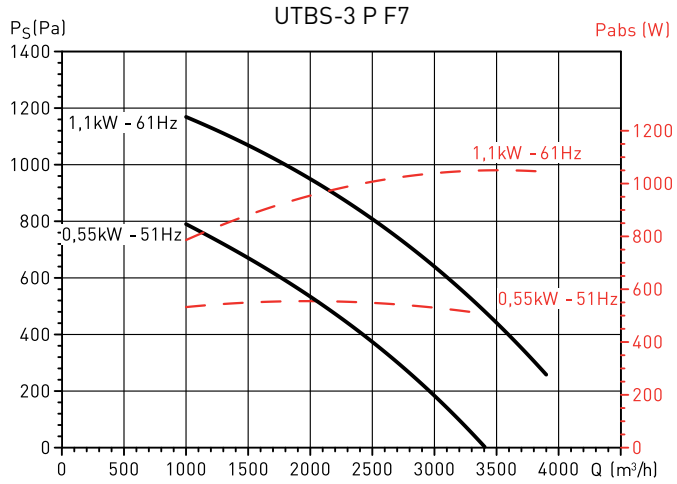

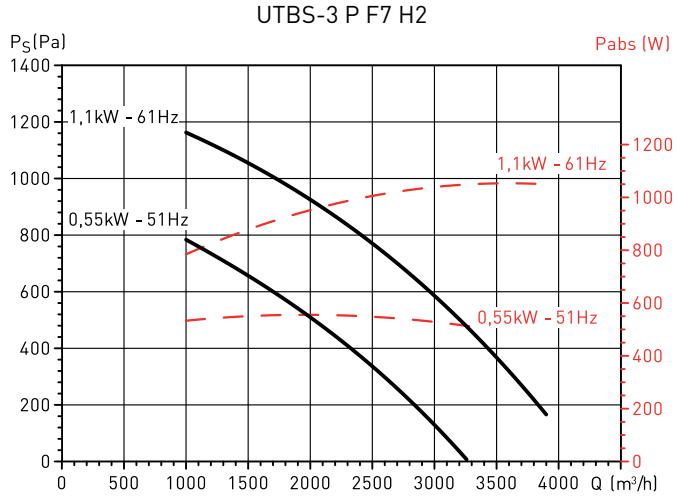

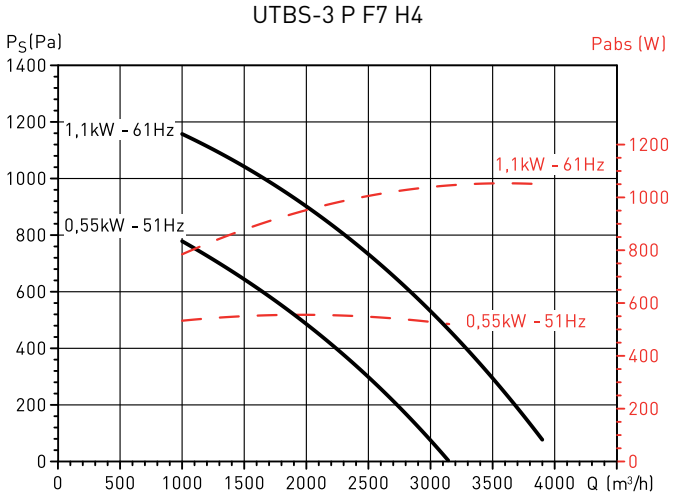

CHARACTERISTIC CURVES

- q_v: Airflow in m³/h.
- p_{sf}: Static pressure in Pa.
- Pabs: Absorbed power at maximum speed (W).
- Dry air at 20ºC and 760 mmHg.
- Performance data in accordance with ISO 5801 and AMCA 210-99.

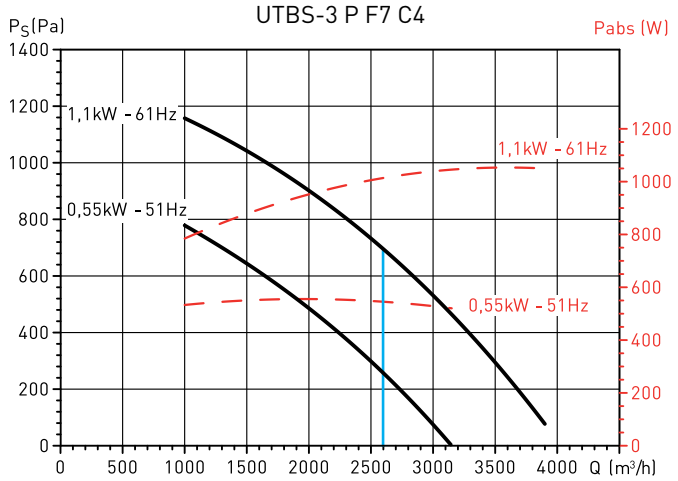

Recommended limit to avoid droplep drag.

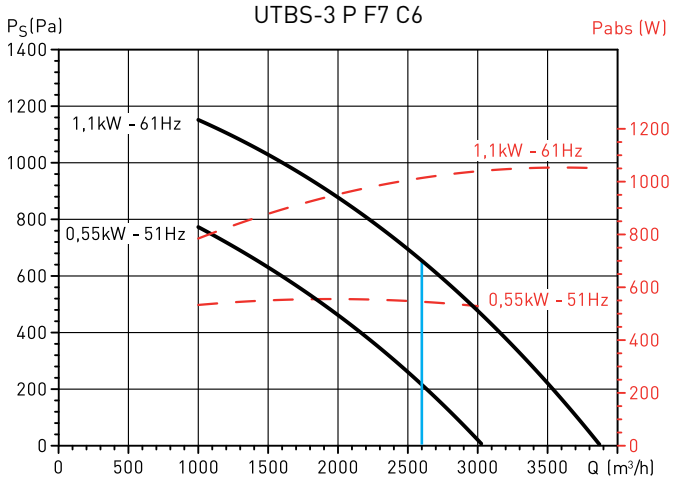

Recommended limit to avoid droplep drag.

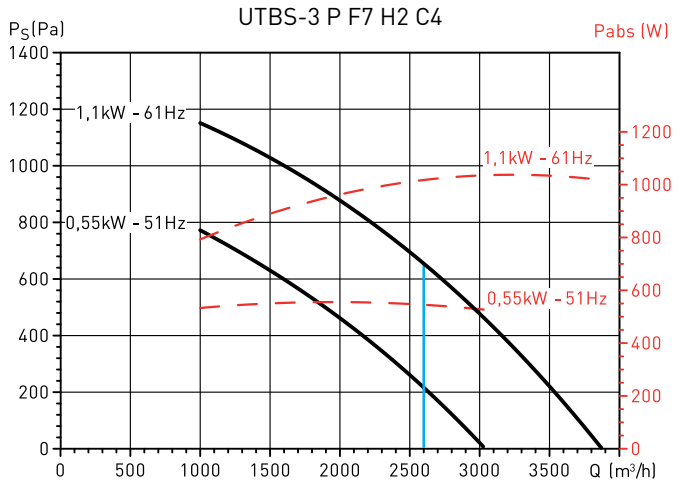

Recommended limit to avoid droplep drag.

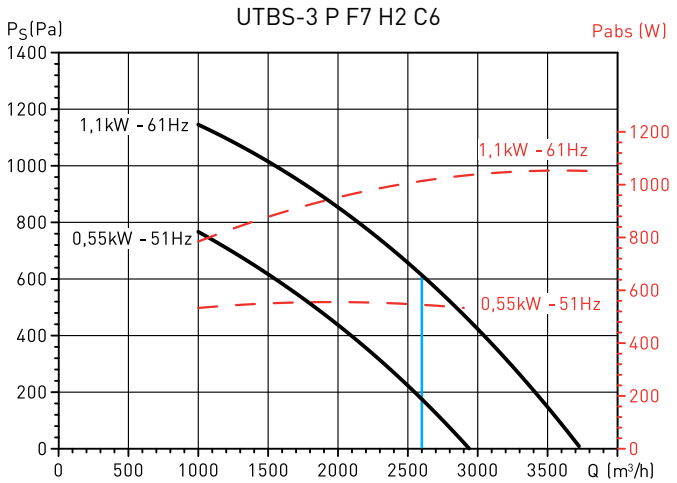

Recommended limit to avoid droplep drag.

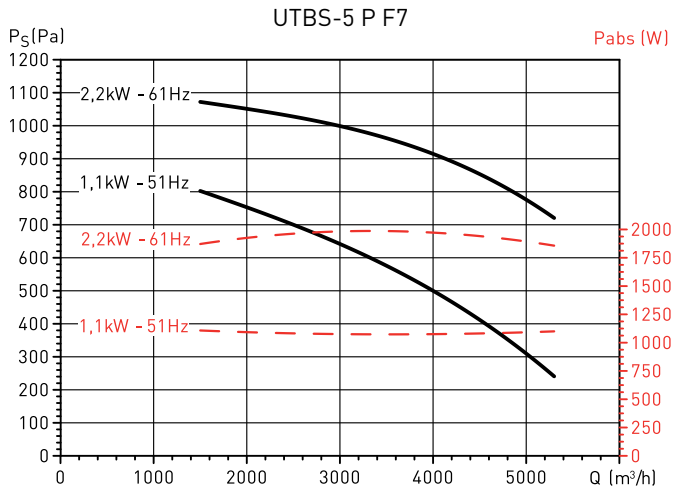

CHARACTERISTIC CURVES

- q_v: Airflow in m³/h.
- p_{sf}: Static pressure in Pa.
- Pabs: Absorbed power at maximum speed (W).
- Dry air at 20ºC and 760 mmHg.
- Performance data in accordance with ISO 5801 and AMCA 210-99.

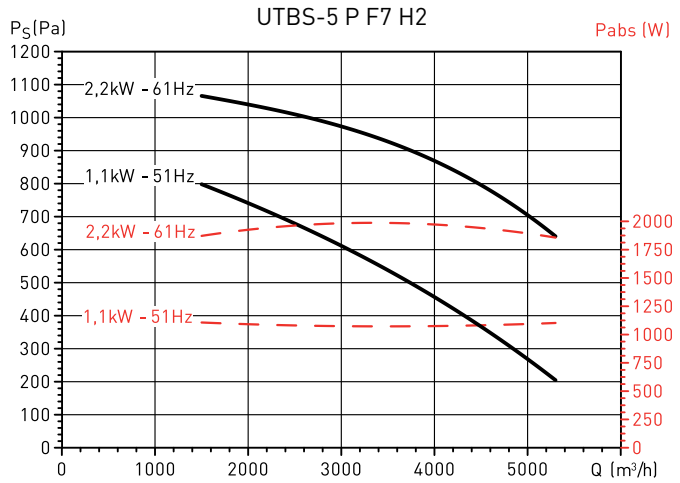

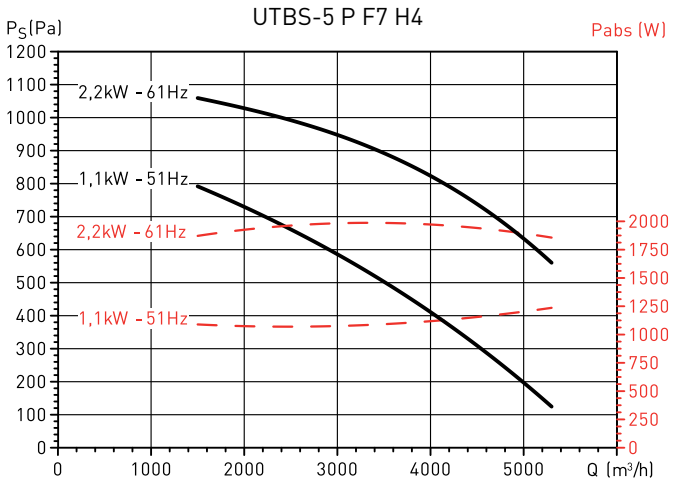

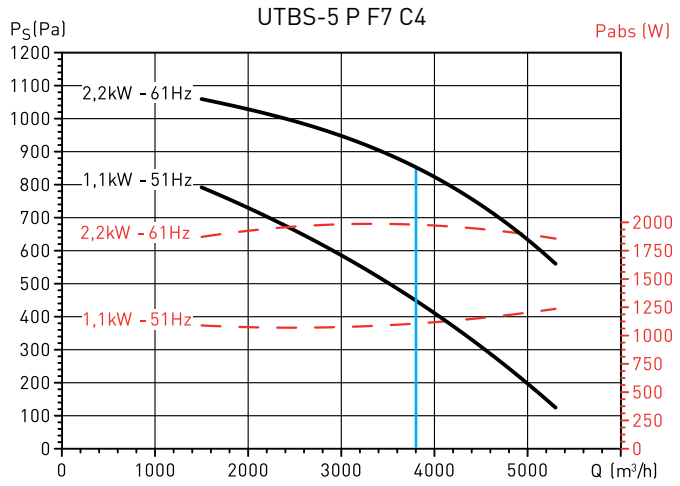

Recommended limit to avoid droplep drag.

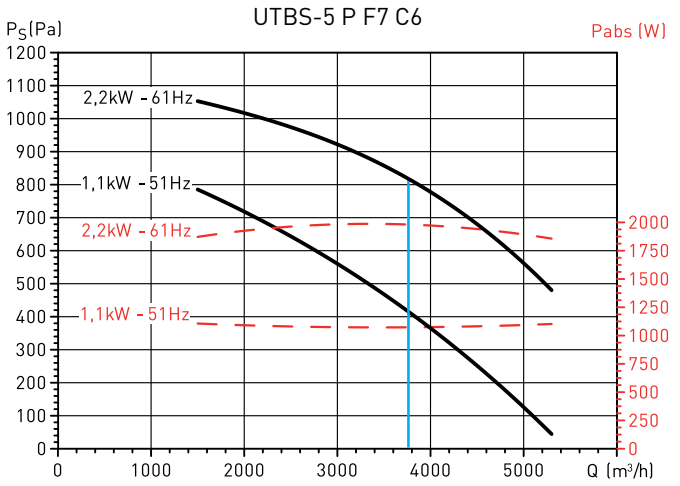

Recommended limit to avoid droplep drag.

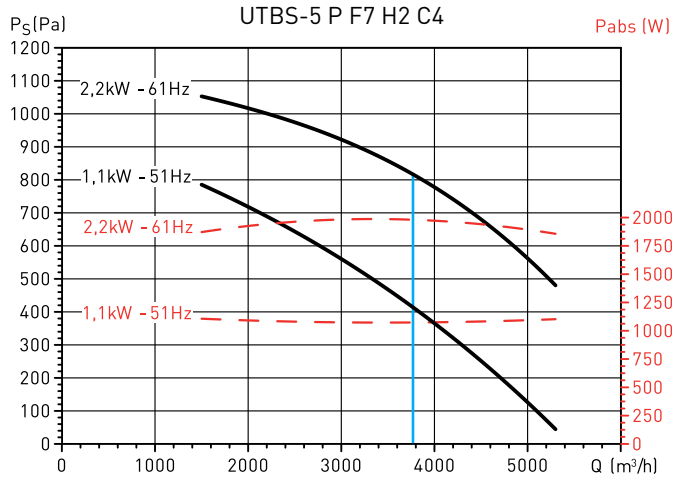

Recommended limit to avoid droplep drag.

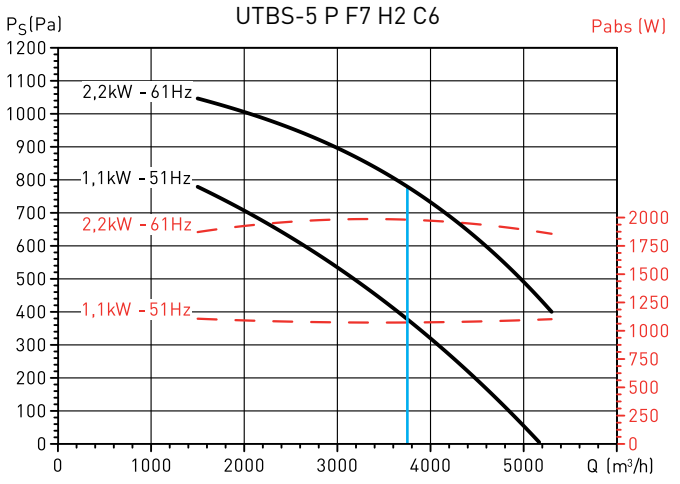

Recommended limit to avoid droplep drag.

CHARACTERISTIC CURVES

- q_v: Airflow in m³/h.
- p_{sf}: Static pressure in Pa.
- Pabs: Absorbed power at maximum speed (W).
- Dry air at 20ºC and 760 mmHg.
- Performance data in accordance with ISO 5801 and AMCA 210-99.

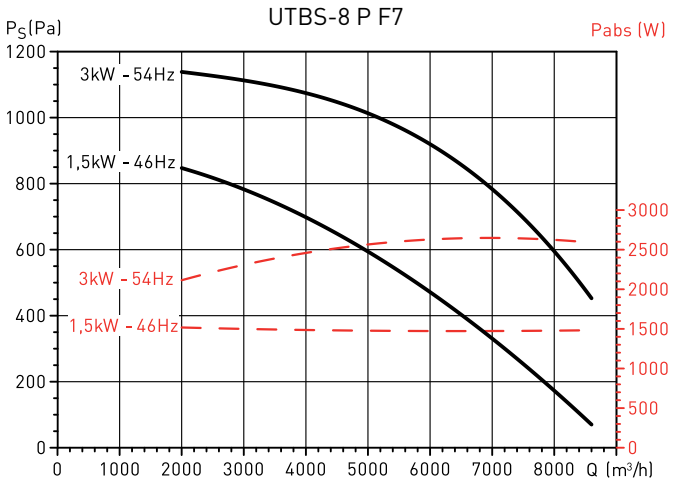

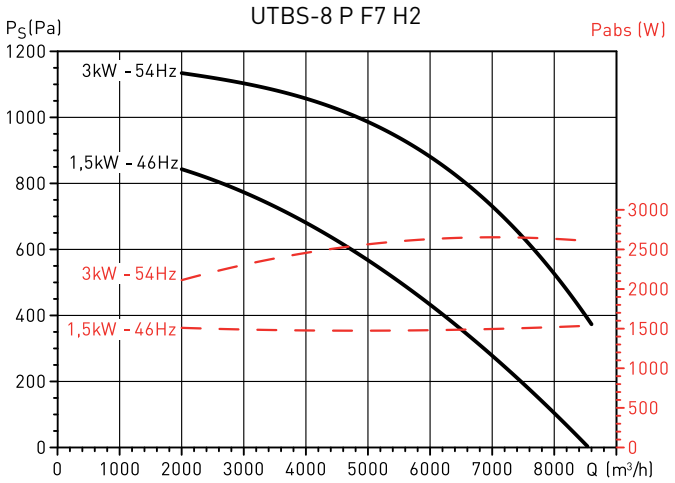

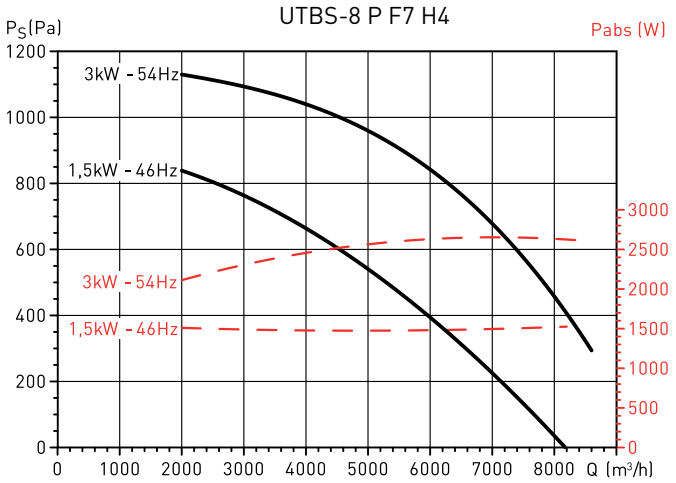

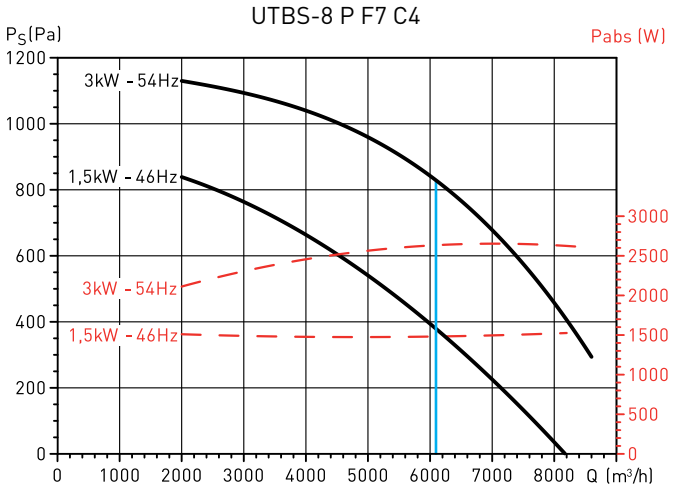

Recommended limit to avoid droplep drag.

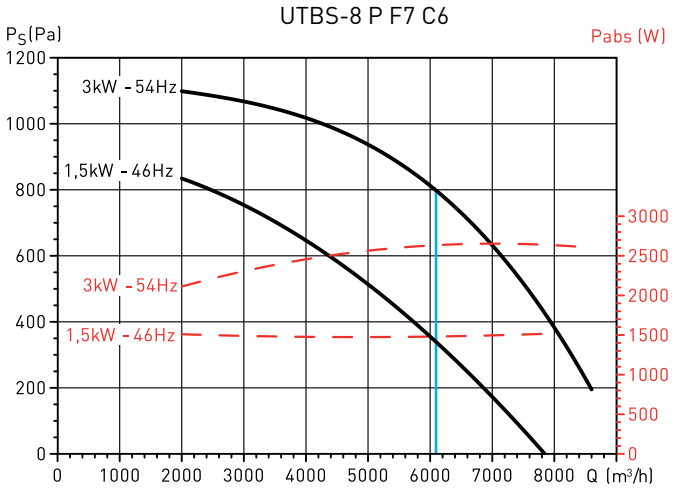

Recommended limit to avoid droplep drag.

CHARACTERISTIC CURVES

- q_v: Airflow in m^3/h.
- p_{sf}: Static pressure in Pa.
- Pabs: Absorbed power at maximum speed (W).
- Dry air at 20ºC and 760 mmHg.
- Performance data in accordance with ISO 5801 and AMCA 210-99.

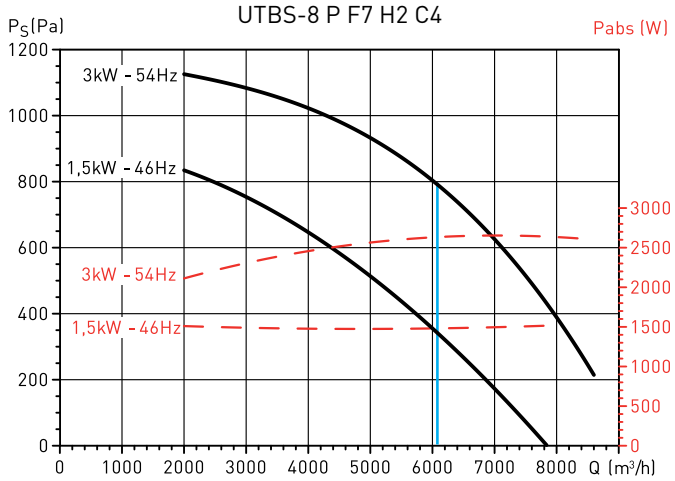

Recommended limit to avoid droplep drag.

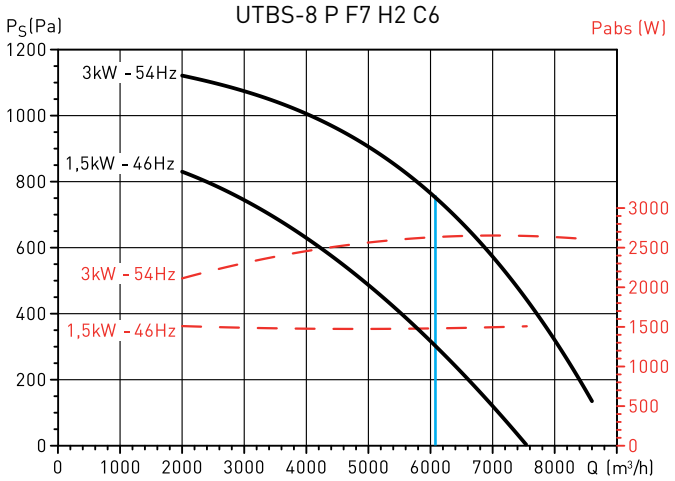

Recommended limit to avoid droplep drag.

MOUNTING ACCESSORIES

Installation with 100% fresh air

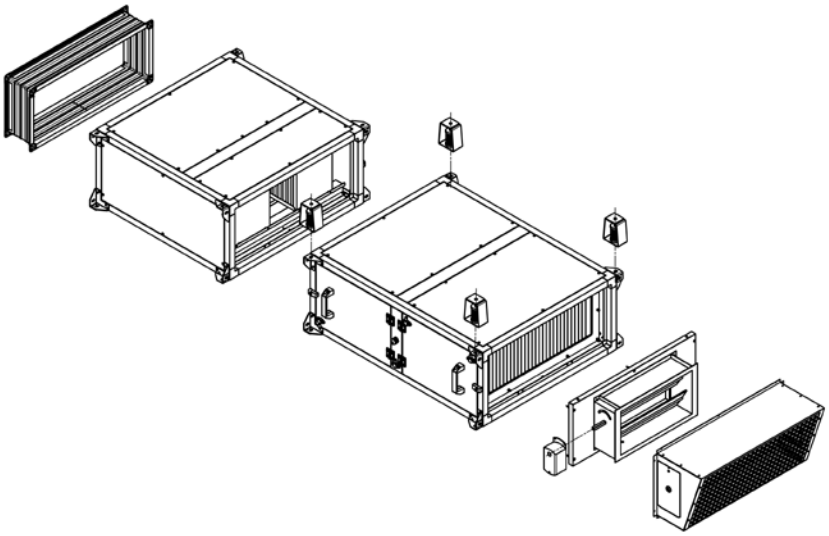

Model	Flexible connector	Sound atte-nuator	Antivibration support	Cover	Isolation damper module	Actuator 24V
UTBS-2	JF-UTBS 650x250	SIL-2 750	AMORTIGUADOR DE MUELLE TM-50	VF UTBS-2	ID KIT COMP. UTBS-2	LF 24 S
UTBS-3	JF-UTBS 1000x300	SIL-3 750	AMORTIGUADOR DE MUELLE TM-50	VF UTBS-3	ID KIT COMP. UTBS-3	
UTBS-5	JF-UTBS 1400x300	SIL-5 750	AMORTIGUADOR DE MUELLE TM-75	VF UTBS-5	ID KIT COMP. UTBS-5	
UTBS-8	JF-UTBS 1800x400	SIL-8 750	AMORTIGUADOR DE MUELLE TM-100	VF UTBS-8	ID KIT COMP. UTBS-8	

Installation with mixing module

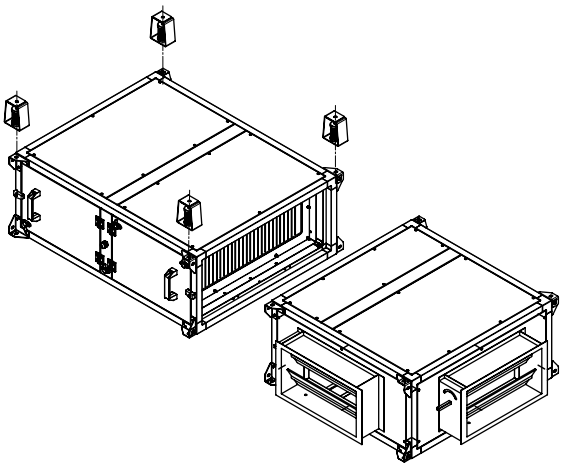

Model	Antivibrator pads	Mixing box (2 rails)				Actuator 24V
		Front and upper/ below damper	Front and side damper	Opposite side dampers	Opposite side and upper/below dam-pers	
UTBS-2	AMORTIGUADOR DE MUELLE TM-50	2MA-2	2MB-2	2MD-2	2ME-2	SM-24/PRO (2 uts.)
UTBS-3	AMORTIGUADOR DE MUELLE TM-50	2MA-3	2MB-3	2MD-3	2ME-3	
UTBS-5	AMORTIGUADOR DE MUELLE TM-75	2MA-5	2MB-5	2MD-5	2ME-5	
UTBS-8	AMORTIGUADOR DE MUELLE TM-100	2MA-8	2MB-8	2MD-8	2ME-8	

MOUNTING ACCESSORIES

Mounting accessories made from galvanized steel (without painting)

ID Isolation damper
Isolation damper, to be installed in impulsion and/or extraction.

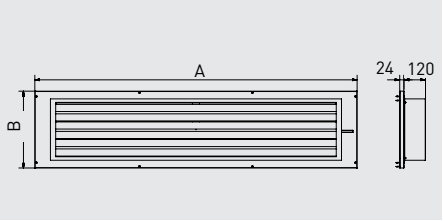

Model	A (mm)	B (mm)
ID KIT UTBS 2	688	298
ID KIT UTBS 3	1038	348
ID KIT UTBS 5	1438	348
ID KIT UTBS 8	1838	438

Flexible connections JF

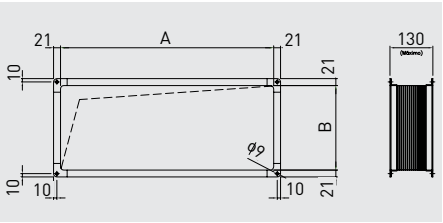

Model	A (mm)	B (mm)	Weight (kg)
JF-UTBS 650x250	646	256	3
JF-UTBS 1000x300	996	306	4
JF-UTBS 1400x300	1396	306	5
JF-UTBS 1800x400	1796	396	6

Antivibration supports

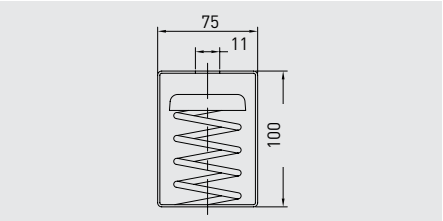

Model	Quantity for UTBS	Nominal load (kg)	Displace-ment (mm)
AMORTIGUADOR DE MUELLE TM-50	4	50	21-27
AMORTIGUADOR DE MUELLE TM-75	4	75	21-27
AMORTIGUADOR DE MUELLE TM-100	4	100	21-27

SIL
Sound attenuator

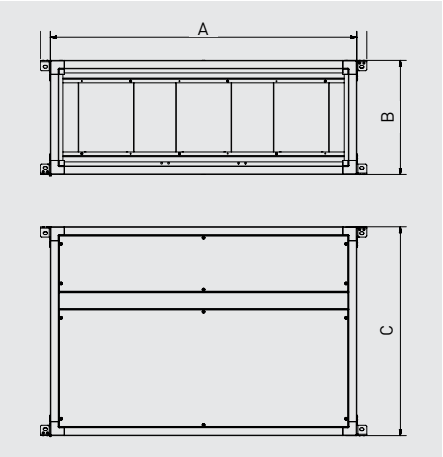

Model	A (mm)	B (mm)	C (mm)	Weight (kg)
SIL-2 750	750	360	750	39
SIL-3 750	1100	410	750	53
SIL-5 750	1500	410	750	65
SIL-8 750	1900	500	750	87

Sound attenuators pressure drop

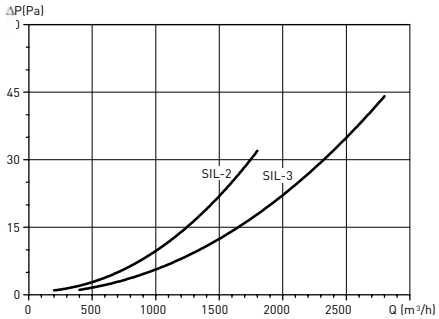

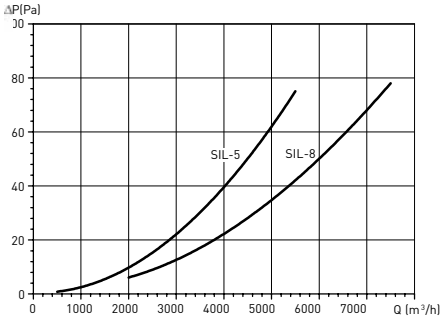

Spare parts and accessories filters

G4	F5	F7	F9	Qty.	Dimensions
AFR UTBS-2 G4	AFR UTBS-2 F5	AFR UTBS-2 F7	AFR UTBS-2 F9	1	645x250x48
AFR UTBS-3 G4	AFR UTBS-3 F5	AFR UTBS-3 F7	AFR UTBS-3 F9	1	995x300x48
AFR UTBS-5 G4	AFR UTBS-5 F5	AFR UTBS-5 F7	AFR UTBS-5 F9	2	695x300x48
AFR UTBS-8 G4	AFR UTBS-8 F5	AFR UTBS-8 F7	AFR UTBS-8 F9	2	895x380x48

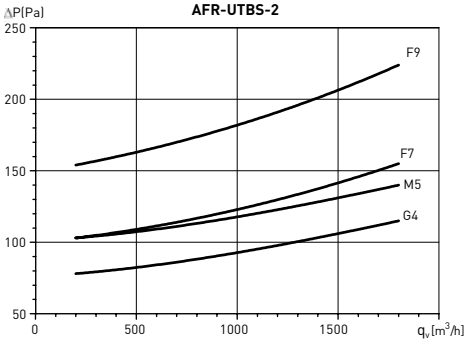

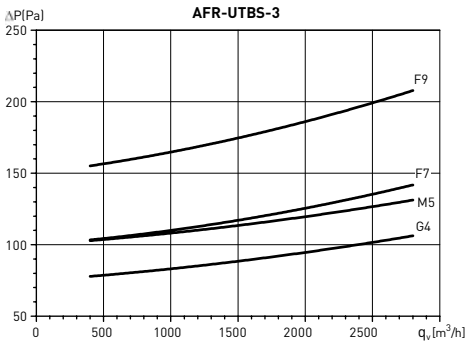

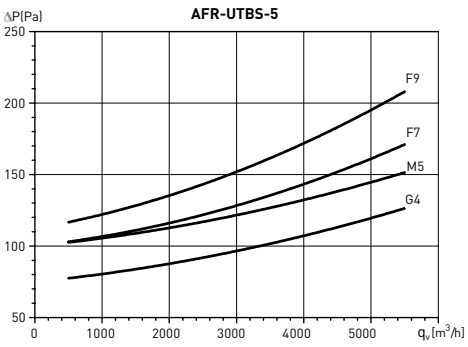

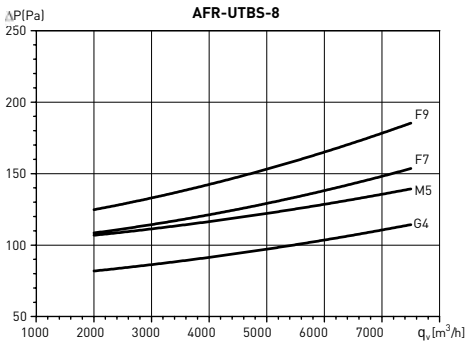

MOUNTING ACCESSORIES

Mixing module with 2 dampers (2M)

The dampers can be activated manually or with servomotor (accessory).

In the modules with side dampers, it is possible to invert the side of the damper assembly by interchanging the side panels.

Dampers

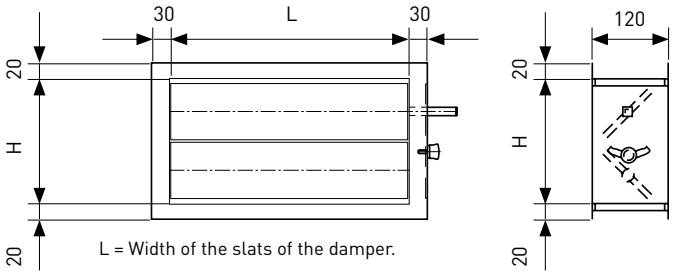

L = Width of the slats of the damper.

H = High useful of the damper.

Model	Mixing modules (2 ways)				Actuator 24V
	Front damper + upper/lower damper	Front damper + side damper	Opposite side dampers	Opposite side damper and upper/lower damper	
UTBS-2	2MA-2	2MB-2	2MD-2	2ME-2	SM-24/PRO (2 uds.)
UTBS-3	2MA-3	2MB-3	2MD-3	2ME-3	
UTBS-5	2MA-5	2MB-5	2MD-5	2ME-5	
UTBS-8	2MA-8	2MB-8	2MD-8	2ME-8	

2MA
Mixing module with front damper and upper/lower damper.

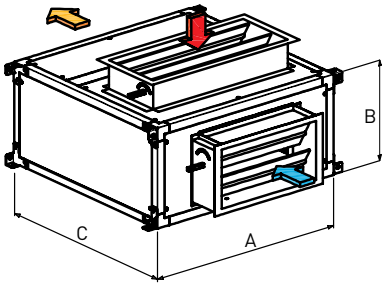

Model	A (mm)	B (mm)	C (mm)	Front damper	Upper/ lower damper	Weight (kg)
				LxH (mm)	LxH (mm)	
UTBS-2	750	360	360	400x210	400x210	22
UTBS-3	1100	410	410	800x210	800x210	31
UTBS-5	1500	410	410	1200x210	1200x210	44
UTBS-8	1900	500	500	1600x310	1600x310	68

2MB
Mixing module with front and side damper.

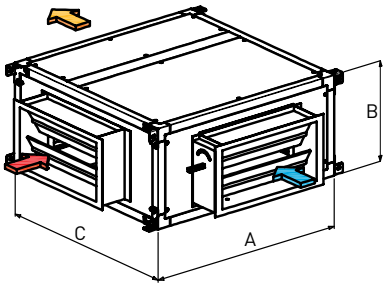

Model	A (mm)	B (mm)	C (mm)	Lateral damper	Front damper	Weight (kg)
				LxH (mm)	LxH (mm)	
UTBS-2	750	360	750	400x210	400x210	39
UTBS-3	1100	410	750	450x310	800x210	52
UTBS-5	1500	410	1205	750x310	1200x210	106
UTBS-8	1900	500	1205	900x410	1600x310	137

2MD
Mixing module with opposite side dampers.

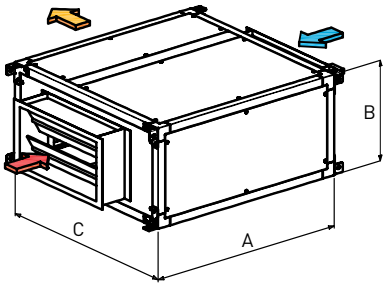

Model	A (mm)	B (mm)	C (mm)	Lateral damper	Weight (kg)
				LxH (mm)	
UTBS-2	750	360	750	400x210	39
UTBS-3	1100	410	750	450x310	52
UTBS-5	1500	410	1205	750x310	106
UTBS-8	1900	500	1205	900x410	137

2ME
Mixing module with lateral damper and upper damper.

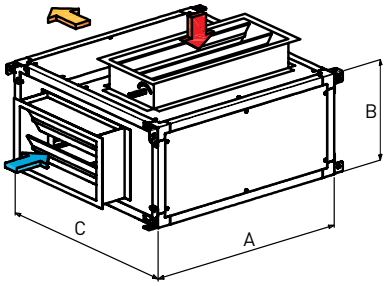

Model	A (mm)	B (mm)	C (mm)	Lateral damper	Upper/ lower damper	Weight (kg)
				LxH (mm)	LxH (mm)	
UTBS-2	750	360	750	400x210	400x210	39
UTBS-3	1100	410	750	450x310	800x210	52
UTBS-5	1500	410	1205	750x310	1200x210	106
UTBS-8	1900	500	1205	900x410	1600x310	137

OPTIONAL MODULES

Optional modules can be added to the main frame and the air conditioner can be completed with additional elements. The width and height dimensions of the modules respect the same as the main module.
The construction of the optional modules is the same as the main module, maintaining the same level of sealing and thermal bridge.
The connection between the modules and the main drawer is made in a simple way by means of external brackets designed to support the weight.

PLENUM BOX (PB)

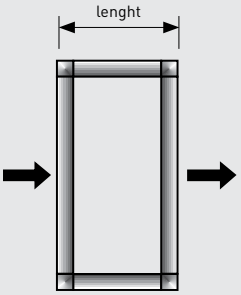

Model	lenght (mm)	Total weight (kg)
UTBS-2	750	16
UTBS-3	750	25
UTBS-5	750	32
UTB S-8	750	49

FILTRATION BOX (FB)

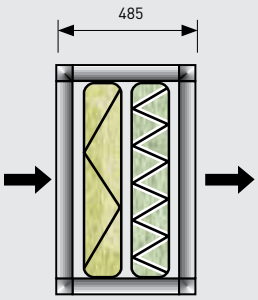

Module with the possibility of introducing a pre-filter and a high efficiency filter.
The module length for any model is 485 mm.

Model	Box weight (kg)	Pre-filter		High efficiency filter	
		Units	Weight (kg)	Units	Weight (kg)
UTBS-2	20	1	2	1	3
UTBS-3	27	1	4	1	5
UTBS-5	34	2	6	2	7
UTB S-8	43	2	8	2	9

WATER COIL BOX (CB)

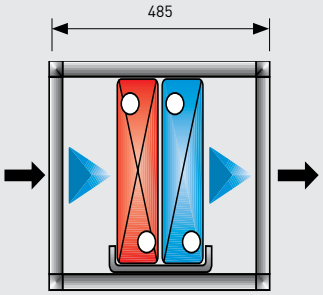

Accessory module with water coils. Coils of hot and cold water can be incorporated into the module. In the case of installing cold water coils, the module incorporates a condensate tray made of stainless steel and a droplet separator.

The thermal characteristics are the same as the UTBS module coils.

A total of 10 rows of coils can be incorporated into the module.
The module length for any model is 485 mm.

Module with electric battery. The electrical battery has an anti-radiation screen upstream of the module. The module length for any model is 485 mm.

UTBS	Available power/stages			total weight (kg)
2	4,5 kW/1et.	15 kW/2et.		25
3	6,0 kW/1et.	15,0 kW/2et.	24 kW/2et.	35
5	9,0 kW/2et.	15,0 kW/2et.	36 kW/3et.	46
8	15,0 kW/2et.	24 kW/2et.	45 kW/3et.	60

MOUNTING ACCESSORIES

Accessories for outdoor installation

UTBS units are designed for being installed in false ceilings.
However, by equipping the equipment with the corresponding accessories, it is possible to install them outdoors in locations where the weather conditions are not extreme.

- Version with structural base (factory mounted)
- Roof (accessory)
- Cover (accessory)

Structural base

Perimetral metal structural base with profiles of height 80 mm. The bench allows to distance the equipment from the ground protecting from moisture, increases rigidity and facilitates the installation of drains.

Roof

The rainproof roof is supplied dismantled and consists of several pieces that are mounted on the equipment at the installation site.

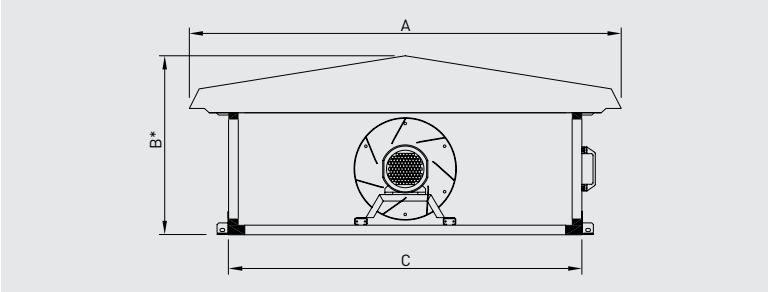

Dimensions in mm

Model	A	B	C
UTBS-2	910	467	750
UTBS-3	1260	548	1100
UTBS-5	1660	583	1500
UTBS-8	2060	708	1900

* In versions -B, with structural base, this height increases by 80 mm.

Roofs for UTBS main modules

	Main module UTBS P F7 (Long frame)			Main module UTBS M5 (Short frame)	
	Without coils	Only electric coil	With water coils	Without coils	With electric and/or water coils
Model	**L = 969mm**	**L = 1205mm**	**L = 1455**	**L = 750mm**	**L = 1205**
UTBS-2	TPP UTBS-2 L-969	TPP UTBS-2 L-1205	TPP UTBS-2 L-1455	TPP UTBS-2 L-750	TPP UTBS-2 L-1205
UTBS-3	TPP UTBS-3 L-969	TPP UTBS-3 L-1205	TPP UTBS-3 L-1455	TPP UTBS-3 L-750	TPP UTBS-3 L-1205
UTBS-5	TPP UTBS-5 L-969	TPP UTBS-5 L-1205	TPP UTBS-5 L-1455	TPP UTBS-5 L-750	TPP UTBS-5 L-1205
UTBS-8	TPP UTBS-8 L-969	TPP UTBS-8 L-1205	TPP UTBS-8 L-1455	TPP UTBS-8 L-750	TPP UTBS-8 L-1205

Roofs for UTBS accessory modules

	Accessories					
	Sound attenuator	Plenum module	Mixing module		Filter box	Water coil module
Model	**SIL-750**	**PB**	**2MA***	**2MB, 2MD y 2ME***	**FB**	**CB**
UTBS-2	TPP UTBS-2 L-750		TPP UTBS-2 L-360	TPP UTBS-2 L-750	TPP UTBS-2 L-485	
UTBS-3	TPP UTBS-3 L-750		TPP UTBS-3 L-410	TPP UTBS-3 L-750	TPP UTBS-3 L-485	
UTBS-5	TPP UTBS-5 L-750		TPP UTBS-5 L-410	TPP UTBS-5 L-1205	TPP UTBS-5 L-485	
UTBS-8	TPP UTBS-8 L-750		TPP UTBS-8 L-500	TPP UTBS-8 L-1205	TPP UTBS-8 L-485	

*In the mixing modules 2MA and 2ME, if the damper is mounted on the top, this is incompatible with the installation of the TPP.

MOUNTING ACCESSORIES

Covers

Mounting accessories are supplied with unpainted galvanized sheet metal finish.

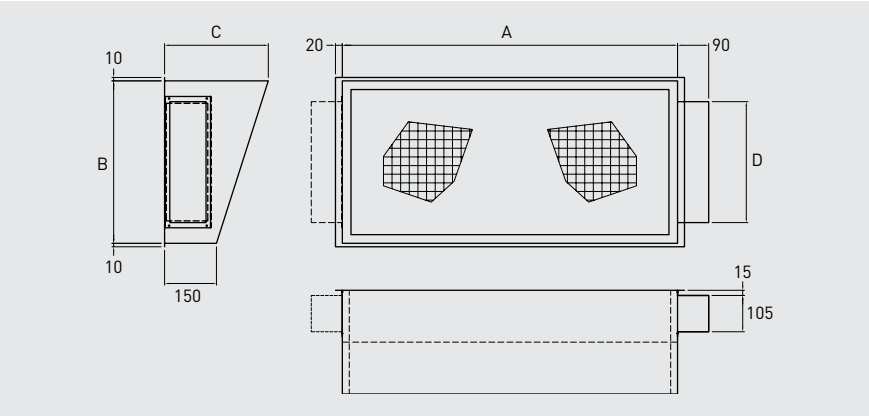

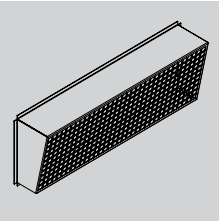

Cover for main module and mixing modules 2MA and 2MB (front)

Model	A	B	C	D	Weight (kg)
VF UTBS-2	470	270	250	200	2
VF UTBS-3	870	270	250	200	3
VF UTBS-5	1270	270	250	200	4
VF UTBS-8	1670	370	275	250	10

Cover for mixing modules: 2MB, 2MD and 2ME (lateral outlet)

Model	A	B	C	D	Weight (kg)
VL UTBS-2	470	270	250	200	2
VL UTBS-3	520	370	275	250	5
VL UTBS-5	820	370	275	250	6
VL UTBS-8	970	470	300	350	8

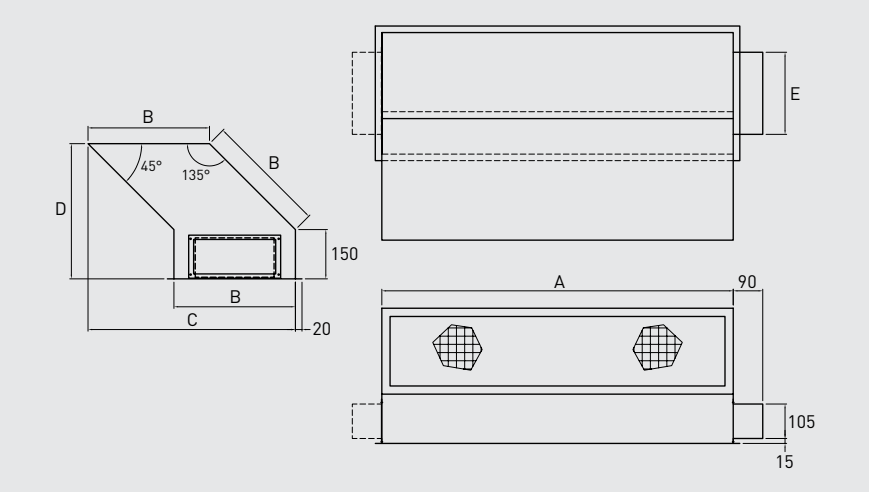

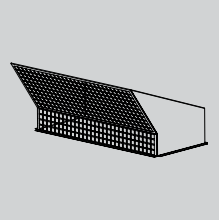

Covers for roof dampers

VS: Cover for upper damper.

Model	A	B	C	D	F	Weight (kg)
VS UTBS-2	470	270	461	341	200	7
VS UTBS-3	870	270	461	341	200	12
VS UTBS-5	1270	270	461	341	200	18
VS UTBS-8	1670	370	631	412	250	22

ELECTRIC ACCESSORIES

Accessories for fan control

In order to meet ErP requirements, Frequency converter must to be delivered with each UTBS. Choose the suitable frequency converter according to selected motor and installation conditions:

Model	Motor	Frequency Converter	
		230/I/50	400/3/50
UTBS-2 0,55kW	1x 0,55kW	VFTM MONO 0,55	VFTM TRI 0,55
UTBS-3 0,55kW	1x 0,55kW	VFTM MONO 0,55	VFTM TRI 0,55
UTBS-3 1,1kW	1x 1,1kW	VFTM MONO 1,1	VFTM TRI 1,1
UTBS-5 1,1kW	2x 0,55kW	VFTM MONO 1,1	VFTM TRI 1,1
UTBS-5 2,2kW	2x 1,1kW	VFTM MONO 2,2	VFTM TRI 2,2
UTBS-8 1,5kW	2x 0,75kW	VFTM MONO 1,5	VFTM TRI 1,5
UTBS-8 3,0kW	2x 1,5kW	–	VFTM TRI 3

Accessories for water coil control

Model	Accessories for coil control		
	Valve*	Thermostat**	Transforme
UTBS-2	3WV PROP 24V	WCT	TRAFO 15-D
UTBS-3	3WV PROP 24V	WCT	TRAFO 15-D
UTBS-5	3WV PROP 24V	WCT	TRAFO 15-D
UTBS-8	3WV PROP 24V	WCT	TRAFO 15-D

* The selection of the valve size must be made for each case in articulated as it depends on the water flow rate and pressure drop of the battery.
** The WCT thermostat can command a single valve in cooling/heating and reversible mode. In 4-pipe systems, 2 independent thermostats are required.

Accessories for the electric battery control

Model	Supply	Power (kW)	Maximum current (A)	Accessories for coil control					
				Power regulator	Temperature sensor		External potentiometer	Presostato	Timer
					duct	ambient			
UTBS-2	3/400V, 50Hz	4,5	6,9	TTC-25*	TG-K330	TG-R530	TBI-30	DPS 2.30	MCR-1
		15	23	TTC-25*	TG-K330	TG-R530	TBI-30	DPS 2.30	MCR-1
UTBS-3	3/400V, 50Hz	6	9,2	TTC-25*	TG-K330	TG-R530	TBI-30	DPS 2.30	MCR-1
		15	23	TTC-25*	TG-K330	TG-R530	TBI-30	DPS 2.30	MCR-1
		24	36,5	TTC-40*	TG-K330	TG-R530	TBI-30	DPS 2.30	MCR-1
UTBS-5	3/400V, 50Hz	9	13,7	TTC-25*	TG-K330	TG-R530	TBI-30	DPS 2.30	MCR-1
		15	23	TTC-25*	TG-K330	TG-R530	TBI-30	DPS 2.30	MCR-1
		36	54,7	TTC-40 + TTS-4**	TG-K330	TG-R530	TBI-30	DPS 2.30	MCR-1
UTBS-8	3/400V, 50Hz	15	23	TTC-25*	TG-K330	TG-R530	TBI-30	DPS 2.30	MCR-1
		24	36,5	TTC-40*	TG-K330	TG-R530	TBI-30	DPS 2.30	MCR-1
		45	68,5	TTC-25 + TTS-4***	TG-K330	TG-R530	TBI-30	DPS 2.30	MCR-1

* 1 auxiliary contactor (not supplied by S&P) is required for electrical operation.
** Two auxiliary contactors (not supplied by S&P) are required for electrical operation.
*** 3 auxiliary contactors (not supplied by S&P) are required for the electrical operation.

ELECTRIC ACCESSORIES

TDP-S sensor
Pressure sensors without display
They are used to control the pressure in ventilation systems at constant pressure or constant flow rate. They allow the differential pressure reading at two points and transform it into an electrical signal suitable for the different types of control.

SCO2-G 0/10V
CO_2 sensor for the duct.
Enables control of the ventilation in sections of duct according to the CO_2 concentration of the air circulating through it.
Output signal: 0-10V
Power supply: 24 VDC.

SCO2-A 0/10V
Ambient CO_2 and temperature sensor without display.
Output: 0-1-0V
Power supply: 24VDC

Actuator for Isolation damper module (ID), LF-24-S
24V power supply with all or nothing output and spring return.
LF-230 S
Servo motor with 230V supply and spring return.

SM-24/PRO
Servo motor to control the mixing module dampers. Supply power 24V (proportional output 0-10V).
SM-24 T/N
Servo motor with 24V output power all or nothing.
SM-230 T/N
Servo motor with 230V output power supply all or nothing.

VFTM IP21/IP54
Adjustable frequency drive for three phase motors to 400V.

3-WAY VALVES WITH PROPORTIONAL ACTUATOR
Three way motorised control valve.
Pressure 1 6 bar.
Rp" internal nut.
Nickel-plated forged brass casing.
Stainless steel valve cone.
Stainless steel shaft.
Average temperatures -1 0..+1 20.
5Nm mounted rotary actuator.
AC/DC 24V, proportional.
90 s/90° valve response time.
DC 2....1 0V working range.
IP 54, automatic or manual activation.